coffey environments
SPECIALISTS IN ENVIRONMENTAL,
SOCIAL AND SAFETY PERFORMANCE

50 YEARS AN EXTRAORDINARY JOURNEY

AHERA THREE-YEAR RE-INSPECTION

Webster Elementary School
3602 Winter Canyon Road
Malibu, California

Prepared for:

Santa Monica-Malibu Unified School District
1651 Sixteenth Street
Santa Monica, California 90404

Project No.: 110-0006
Date: June 22, 2010

Coffey Environments
3777 Long Beach Boulevard Annex Building
Long Beach CA 90807 United States of America
T +1 310 530 5006 F +1 310 530 0792
Toll-free (US only) 800 777-0605 coffey.com

coffey environments
SPECIALISTS IN ENVIRONMENTAL,
SOCIAL AND SAFETY PERFORMANCE

50 YEARS AN EXTRAORDINARY JOURNEY

June 22, 2010

Santa Monica-Malibu Unified School District
1651 Sixteenth Street
Santa Monica, California 90404

Attention: Mr. Terry Kamabayashi

Ref: Three-year Re-Inspection
Webster Elementary School, 3602 Winter Canyon Road, Malibu, California

Coffey Environments Project No. 110-0006

Dear Mr. Kamabayashi:

Coffey Environments is pleased to present its report for three-year re-inspection of Webster Elementary School, located at 3602 Winter Canyon Road, Malibu, California .

Please do not hesitate to contact the undersigned if you wish to discuss any aspect of the report.

Respectfully submitted by:

Coffey Environments

Elmer Castro
Certified Site Surveillance Technician
Cal/OSHA Cert. #08-4406

Reviewed by:

Coffey Environments

Cesar Ruvalcaba
Certified Asbestos Consultant
Cal/OSHA Cert. #95-1799

REPORTED: June 22, 2010 **PROJECT NO.:** 110-0006

CLIENT: Santa Monica-Malibu Unified School District
1651 Sixteenth Street
Santa Monica, California 90404

ATTENTION: Mr. Terry Kamabayashi

REF: AHERA Three-year Re-inspection
Webster Elementary School
3602 Winter Canyon Road
Malibu, California

1 PROJECT SUMMARY

Coffey Environments conducted an AHERA three-year re-inspection of Webster Elementary School, located at 3602 Winter Canyon Road, Malibu, California . Elmer Castro, a Cal/OSHA Certified Site Surveillance Technician and EPA-accredited Building Inspector employed by Coffey Environments, conducted the inspection on March 15, 2010 .

2 FIELD AND ANALYTICAL METHODOLOGY

The inspection was conducted in accordance with protocol set forth in the Asbestos Hazard Emergency Response Act (AHERA) *40 CFR 763 Subpart E*. Information in this report is based on the original AHERA inspection conducted in fulfillment of the requirements of *40 CFR 763 Subpart E*.

The re-inspection activities included the following elements:

- Visual inspection of known asbestos-containing materials (ACM), both friable and non-friable, and suspect ACM not previously identified or sampled;
- Identification of friable and non-friable ACM including ACM not previously identified or sampled; and
- Assessment of friable and damaged non-friable ACM, including ACM not previously identified or sampled.

3 RESULTS

Please refer to the AHERA three-year re-inspection material inventory located in Appendix A.

4 RECOMMENDATIONS

ACM should be monitored and maintained as part of the Webster Elementary School operations and maintenance program until renovation or demolition activities require removal or until material becomes

EXECUTIVE SUMMARY

Coffey Environments conducted an AHERA three-year re-inspection of Webster Elementary School, located at 3602 Winter Canyon Road, Malibu, California . Our Certified Site Surveillance Technician/Certified Asbestos Consultant conducted the following activities to document the project:

- Visual inspection of known asbestos-containing materials (ACM), both friable and non-friable, and suspect ACM not previously identified or sampled;
- Identification of friable and non-friable ACM including ACM not previously identified or sampled;
- Assessment of friable and damaged non-friable ACM, including ACM not previously identified or sampled; and
- For each suspect material not assumed to be ACM, the inspection include the collection, submission and analysis of bulk samples as outlined in *40 CFR 763 Subpart E.*

CONTENTS

Appendices

significantly damaged or the hazard potential changes. Remove or repair these items when practical and cost-effective in conjunction with an EPA-accredited Project Designer.

5 ASSUMPTIONS AND LIMITATIONS

This report was prepared exclusively for use by Santa Monica-Malibu Unified School District, and may not be relied upon by any other person or entity without Coffey Environments' express written permission. The information, conclusions and recommendations described in this report apply to conditions existing at certain locations when services were performed and are intended only for the specific purposes, locations, time frames and project parameters indicated. Coffey Environments cannot be responsible for the impact of any changes in environmental standards, practices or regulations after performance of services.

In performing our professional services, we have applied present engineering and scientific judgment and used a level of effort consistent with the current standard of practice for similar types of studies.

As applicable, Coffey Environments has relied in good faith upon representations and information furnished by individuals with respect to operations and existing property conditions, to the extent that they have not been contradicted by data obtained from other sources. Accordingly, Coffey Environments accepts no responsibility for any deficiencies, omissions, misrepresentations, or fraudulent acts of persons interviewed.

Coffey Environments will not accept any liability for loss, injury claim, or damage arising directly or indirectly from any use or reliance on this report. Coffey Environments makes no warranty, expressed or implied

This report is issued with the understanding that the client, the property owner, or its representative is responsible for ensuring that the information, conclusions, and recommendations contained herein are brought to the attention of the appropriate regulatory agencies, as required.

If you have any questions, please do not hesitate to contact the undersigned at (310) 530-5006. We appreciate the opportunity to be of service to Santa Monica-Malibu Unified School District.

6 SIGNATORY

Respectfully submitted by:

Coffey Environments

Elmer Castro
Certified Site Surveillance Technician
Cal/OSHA Cert. #08-4406

Reviewed by:

Coffey Environments

Cesar Ruvalcaba
Certified Asbestos Consultant
Cal/OSHA Cert. #95-1799

CR:cdm

Appendix A

AHERA Three-Year Re-Inspection Material Inventories

coffey environments
SPECIALISTS IN ENVIRONMENTAL, SOCIAL AND SAFETY PERFORMANCE

Client: Santa Monica-Malibu Unified School District
Project No.: 110-0006
Project Name: AHERA 3-year re-inspection-Webster ES

Building A

Material Class (1)	Material	Material Location	Current Assessment (2)	Friable (Y or N)	Approximate Quantity	Results (3) or Sample #	Recommendations/ Response Action (4)
S	Stucco	Exterior walls	ND	No	3,000 sq. ft.	<1% Chysotile	8
S	Plaster	Room 17-20 and heater closets	ND	No	3,500 sq. ft.	None detected	N/A
M	Drywall with joint compound	Room 17, 18 and room 20 dividing walls	ND	No	800 sq. ft.	None detected	N/A
M	Carpet glue	Rooms 17-20	ND	No	2,800 sq. ft.	None detected	N/A
M	12x12 light green speckled floor tile and glue	Room 17, room 18 under carpet, room 20	ND	No	2,200 sq. ft.	None detected	N/A
M	4 inch dark green cove base and glue	Room 17, room 20, room 19	ND	No	90 ln. ft.	None detected	N/A
M	4 inch brown cove base and glue	Room 18	ND	No	75 ln. ft.	None detected	N/A
M	4 inch gray cove base and glue	Room 20	ND	No	30 ln. ft.	None detected	N/A
M	2x4 fissured ceiling panel	Rooms 17-20	ND	Yes	3,200 sq. ft.	None detected	N/A
M	HVAC duct tape (gray)	Heater closets 1, 2, 3, 4	ND	No	20 sq. ft.	None detected	N/A

coffey environments
SPECIALISTS IN ENVIRONMENTAL, SOCIAL AND SAFETY PERFORMANCE

Client: Santa Monica-Malibu Unified School District
Project No.: 110-0006
Project Name: AHERA 3-year re-inspection-Webster ES

Building A

Material Class (1)	Material	Material Location	Current Assessment (2)	Friable (Y or N)	Approximate Quantity	Results (3) or Sample #	Recommendations/ Response Action (4)
M	Heater units	Heater closets	ND	No	4 each	Assumed 1	8
M	12" beige speckled floor tile and mastic	Room 14	ND	No	120 sq. ft.	Assumed 1	8
M	Window putty	Exterior windows	ND	No	2,500 in. ft.	None detected	N/A

(1) S: surfacing, TSI: thermal system insulation, M: miscellaneous
(2) ND: not damaged, D: damaged, SD: significantly damaged
(3) POS: previously identified as positive, NEG: previously identified as negative, ASSUMED 1 = new material, not sampled, assumed asbestos-containing; ASSUMED 2 = not enough samples collected, material is assumed asbestos-containing
(4) For response actions 1–8 refer to "Response Action Ratings Sheet"

coffey environments
SPECIALISTS IN ENVIRONMENTAL, SOCIAL AND SAFETY PERFORMANCE

Client: Santa Monica-Malibu Unified School District
Project No.: 110-0006
Project Name: AHERA 3-year re-inspection-Webster ES

Building B

Material Class (1)	Material	Material Location	Current Assessment (2)	Friable (Y or N)	Approximate Quantity	Results (3) or Sample #	Recommendations/ Response Action (4)
S	Stucco	Exterior walls	ND	No	2,200 sq. ft.	None detected	N/A
M	Gypsum with joint compound	Classrooms, work rooms (dividing walls), toilets, storages	ND	No	1,600 sq. ft.	Positive	8
M	Window putty	Exterior walls	ND	No	1,200 sq. ft.	None detected	N/A
M	Drywall joint compound	Storage room	ND	No	750 sq. ft.	None detected	N/A
M	9" gray floor tile with yellow steaks	Work room 2 and 1	ND	No	80 sq. ft.	Positive	8
M	Drywall with joint compound	Heater rooms	ND	No	600 sq. ft.	3% Chrysotile	8
M	12x12 light green floor tile and glue	Room 11 and 12	ND	No	500 sq. ft.	Assumed 1	8
M	4 inch dark green cove base and glue	Room 11 and 12	ND	No	180 sq. ft.	Assumed 1	8
M	Carpet glue	Room 11 and 12	ND	No	1,800 sq. ft.	Assumed 1	8
M	2x4 fissured ceiling panel	Room 11 and 12	ND	Yes	2,300 sq. ft.	Assumed 1	8

coffey environments
SPECIALISTS IN ENVIRONMENTAL, SOCIAL AND SAFETY PERFORMANCE

Client: Santa Monica-Malibu Unified School District
Project No.: 110-0006
Project Name: AHERA 3-year re-inspection-Webster ES

Building B

Material Class (1)	Material	Material Location	Current Assessment (2)	Friable (Y or N)	Approximate Quantity		Results (3) or Sample #	Recommendations/ Response Action (4)
M	12" random peghole ceiling tile	Room 11 and 12 south side	ND	Yes	10	sq. ft.	Negative	N/A
M	Heater unit	Heater closets	ND	No	2	each	Assumed 1	8
M	Chalk boards	non-suspect ACM	ND	No	N/A	N/A	N/A	N/A

(1) S: surfacing, TSI: thermal system insulation, M: miscellaneous
(2) ND: not damaged, D: damaged, SD: significantly damaged
(3) POS: previously identified as positive, NEG: previously identified as negative, ASSUMED 1 = new material, not sampled, assumed asbestos-containing; ASSUMED 2 = not enough samples collected, material is assumed asbestos-containing
(4) For response actions 1–8 refer to "Response Action Ratings Sheet"

coffey environments
SPECIALISTS IN ENVIRONMENTAL, SOCIAL AND SAFETY PERFORMANCE

Client: Santa Monica-Malibu Unified School District
Project No.: 110-0006
Project Name: AHERA 3-year re-inspection-Webster ES

Building C

Material Class (1)	Material	Material Location	Current Assessment (2)	Friable (Y or N)	Approximate Quantity	Results (3) or Sample #	Recommendations/ Response Action (4)
S	Stucco	Exterior walls	ND	No	3,900 sq. ft.	None detected	N/A
M	12" gray floor tile with brown streaks and mastic	Under carpets in ESL room and classroom 15	ND	No	800 sq. ft.	Positive	8
M	Window putty	Exterior windows	ND	No	2,600 sq. ft.	<1% Chrysotile	8
	12" random pin hole ceiling tile glue	ESL room			600 sq. ft.	None detected	
	12" random pinhole ceiling tile (new)	Replacement in ESL classroom			20 sq. ft.	None detected	
M	Rough plaster	Boy's, Girl's, custodian room and electrical room	ND	No	950 sq. ft.	None detected	N/A
M	HVAC duct tape	Heater closets	ND	No	4 each	None detected	N/A
M	Drywall with joint compound	Room 13-16 dividing walls, room 16A walls and ceilings, boy's, girl's, electrical room and custodian ceilings	ND	No	3,100 sq. ft.	2% Chrysotile	8
M	Drywall with joint compound	Heater closet 1-4	ND	No	700 sq. ft.	2% Chrysotile	8
M	12x12 light speckled green floor tile and glue	13, 14, 15, 16	ND	No	800 sq. ft.	Assumed 1	8

coffey environments
SPECIALISTS IN ENVIRONMENTAL, SOCIAL AND SAFETY PERFORMANCE

Client: Santa Monica-Malibu Unified School District
Project No.: 110-0006
Project Name: AHERA 3-year re-inspection-Webster ES

Building C

Material Class (1)	Material	Material Location	Current Assessment (2)	Friable (Y or N)	Approximate Quantity	Results (3) or Sample #	Recommendations/ Response Action (4)
M	4 inch dark green cove base and glue	Rooms 13, 14, 15, 16	ND	No	240 ln. ft.	Assumed 1	8
M	4 inch gray cove base and glue	ESL room (16A), 16	ND	No	70 ln. ft.	Assumed 1	8
	2x4 fissured ceiling panel	Room 13-16	ND	Yes	3,800 sq. ft.	Assumed 1	8
M	Chalk board	Rooms 13, 14, 15, 16 and 16A (ESL)	ND	No	9 each	Assumed 1	8
M	Heater units	Rooms 13, 14, 15, 16 and 16A (ESL)	ND	No	5 each	Assumed 1	8

(1) S: surfacing, TSI: thermal system insulation, M: miscellaneous
(2) ND: not damaged, D: damaged, SD: significantly damaged
(3) POS: previously identified as positive, NEG: previously identified as negative, ASSUMED 1 = new material, not sampled, assumed asbestos-containing; ASSUMED 2 = not enough samples collected, material is assumed asbestos-containing
(4) For response actions 1–8 refer to "Response Action Ratings Sheet"

coffey environments
SPECIALISTS IN ENVIRONMENTAL, SOCIAL AND SAFETY PERFORMANCE

Client: Santa Monica-Malibu Unified School District
Project No.: 110-0006
Project Name: AHERA 3-year re-inspection-Webster ES

Building D

Material Class (1)	Material	Material Location	Current Assessment (2)	Friable (Y or N)	Approximate Quantity	Results (3) or Sample #	Recommendations/ Response Action (4)
S	Stucco	Exterior walls	ND	No	2,950 sq. ft.	None detected	N/A
M	12" brown floor tile with peach specks with mastic	Room 19 and 20 under carpet	ND	No	600 sq. ft.	Positive	8
S	Rough plaster ceiling	Heater closet and electrical room	ND	No	700 sq. ft.	None detected	8
M	9" dark tan with brown floor tile and mastic	Electrical room 4		No	40 sq. ft.	Positive	8
M	4 inch brown cove base with glue	Electrical room		No	20 ln. ft.	None detected	
M	Window putty	Exterior windows	ND	No	200 ln. ft.	2% Chrysotile	8
M	Drywall with joint compound	All dividing walls, except electrical room and heater closets	ND	No	3,800 sq. ft.	None detected	N/A
M	4 inch gray cove base and glue	Nurses office, audio testing room, work room, principals office, main office and hall	ND	No	280 ln. ft.	Assumed 1	8
M	HVAC duct tape	Heater room	ND	No	5 sq. ft.	Assumed 1	8

coffey environments
SPECIALISTS IN ENVIRONMENTAL, SOCIAL AND SAFETY PERFORMANCE

Client: Santa Monica-Malibu Unified School District
Project No.: 110-0006
Project Name: AHERA 3-year re-inspection-Webster ES

Building D

Material Class (1)	Material	Material Location	Current Assessment (2)	Friable (Y or N)	Approximate Quantity	Results (3) or Sample #	Recommendations/ Response Action (4)
M	2x4 fissured ceiling panel	Nurses office, audio testing room, work room, main office, principals office and hall	ND	Yes	1,800 sq. ft.	Assumed 1	8
M	Heater unit	Heater room	ND	No	1 each	Assumed 1	8
M	12x12 light green floor tile and glue	Principal office, main office, nurses office, work room, hall	ND	No	1,400 sq. ft.	Assumed 1	8

(1) S: surfacing, TSI: thermal system insulation, M: miscellaneous
(2) ND: not damaged, D: damaged, SD: significantly damaged
(3) POS: previously identified as positive, NEG: previously identified as negative, ASSUMED 1 = new material, not sampled, assumed asbestos-containing; ASSUMED 2 = not enough samples collected, material is assumed asbestos-containing
(4) For response actions 1–8 refer to "Response Action Ratings Sheet"

coffey environments
SPECIALISTS IN ENVIRONMENTAL, SOCIAL AND SAFETY PERFORMANCE

Client: Santa Monica-Malibu Unified School District
Project No.: 110-0006
Project Name: AHERA 3-year re-inspection-Webster ES

Building E

Material Class (1)	Material	Material Location	Current Assessment (2)	Friable (Y or N)	Approximate Quantity	Results (3) or Sample #	Recommendations/ Response Action (4)
S	Stucco	Exterior walls	ND	No	1,950 sq. ft	None detected	N/A
M	Drywall with joint compound	Office 2, east wall computer room walls	ND	No	480 sq. ft	None detected	N/A
M	Window putty	Exterior windows	ND	No	800 ln. ft.	None detected	N/A
M	Rough plaster walls	Library	ND	No	2,950 sq. ft	None detected	N/A
S	Smooth plaster walls	Office 1, 2 and heater closet	ND	No	2,450 sq. ft	None detected	N/A
M	12" random peg hole wall and tile glue	Heater closet	ND	Yes	100 sq. ft	None detected	N/A
M	Carpet glue	Room 7	ND	No	900 sq. ft	None detected	N/A
M	Brown floor tile and mastic	Room 7 under carpet	ND	No	900 sq. ft	5% Chrysotile (tile) 2% Chrysotile	8
M	12"x12" gray speckled floor tile	Office 1 and 2	ND	No	700 sq. ft	None detected	N/A
M	12x12 light green floor tile and glue	Room 7	ND	No	250 sq. ft	Assumed 1	8

coffey environments
SPECIALISTS IN ENVIRONMENTAL, SOCIAL AND SAFETY PERFORMANCE

Client: Santa Monica-Malibu Unified School District
Project No.: 110-0006
Project Name: AHERA 3-year re-inspection-Webster ES

Building E

Material Class (1)	Material	Material Location	Current Assessment (2)	Friable (Y or N)	Approximate Quantity	Results (3) or Sample #	Recommendations/ Response Action (4)
M	4 inch dark green cove base and glue	Library, office 1, 2 computer	ND	No	400 ln. ft.	Assumed 1	8
M	HVAC duct tape	Heater closet	ND	No	2 sq. ft	Assumed 1	8
M	2x4 fissured ceiling panel	Library, room 7	ND	Yes	3,000 sq. ft	Assumed 1	8
M	Heater unit	Heater closet	ND	No	1 each	Assumed 1	8
M	4" black covebase and adhesive	Office 1	ND	No	100 ln. ft.	Assumed 1	8
M	12" blue floor tile and adhesive	Comp. room, office 7	ND	No	700 sq. ft.	Assumed 1	8
M	Chalk board	Room 7	ND	No	1400 sq. ft.	Assumed 1	8

(1) S: surfacing, TSI: thermal system insulation, M: miscellaneous
(2) ND: not damaged, D: damaged, SD: significantly damaged
(3) POS: previously identified as positive, NEG: previously identified as negative, ASSUMED 1 = new material, not sampled, assumed asbestos-containing; ASSUMED 2 = not enough samples collected, material is assumed asbestos-containing
(4) For response actions 1–8 refer to "Response Action Ratings Sheet"

coffey environments
SPECIALISTS IN ENVIRONMENTAL, SOCIAL AND SAFETY PERFORMANCE

Client: Santa Monica-Malibu Unified School District
Project No.: 110-0006
Project Name: AHERA 3-year re-inspection-Webster ES

Building F

Material Class (1)	Material	Material Location	Current Assessment (2)	Friable (Y or N)	Approximate Quantity	Results (3) or Sample #	Recommendations/ Response Action (4)
S	Stucco	Exterior walls	ND	No	2,200 sq. ft.	None detected	N/A
M	Rough plaster walls	Classrooms, janitors closet and mechanical room	ND	No	2,500 sq. ft.	None detected	N/A
M	Window putty	Exterior windows	ND	No	300 ln. ft.	Positive	8
M	Smooth plaster ceiling	Boy's restrooms and girl's restrooms	ND	No	500 sq. ft.	None detected	N/A
S	Smooth plaster wall	Boy's and girl's walls	ND	No	950 sq. ft.	None detected	N/A
M	Brown floor tile and mastic	Rooms 9 and 10 under carpet	ND	No	1,600 sq. ft.	5% Chrysotile (tile and mastic)	8
M	12" straight peg hole ceiling and glue	Rooms 8, 9, 10	ND	No	700 sq. ft.	None detected	N/A
M	Drywall	Rooms 8, 9, 10	ND	No	700 sq. ft.	None detected	N/A
M	12x12 light green floor tile and glue	Rooms 8, 9, 10	ND	No	750 sq. ft.	Assumed 1	8
M	4 inch gray cove base and glue	Rooms 8, 9, 10 tiled area	ND	No	90 ln. ft.	Assumed 1	8

coffey environments
SPECIALISTS IN ENVIRONMENTAL, SOCIAL AND SAFETY PERFORMANCE

Client: Santa Monica-Malibu Unified School District
Project No.: 110-0006
Project Name: AHERA 3-year re-inspection-Webster ES

Building F

Material Class (1)	Material	Material Location	Current Assessment (2)	Friable (Y or N)	Approximate Quantity	Results (3) or Sample #	Recommendations/ Response Action (4)
M	HVAC duct tape	Mechanical room	ND	No	50 sq. ft.	Assumed 1	8
M	Carpet glue	Rooms 8, 9, 10	ND	No	2,700 sq. ft.	Assumed 1	8
M	2x4 fissured ceiling panel	Rooms 8, 9, 10	ND	Yes	3,400 sq. ft.	Assumed 1	8
M	Heater unit	Mechanical room	ND	No	1 each	Assumed	8
M	Chalk board	Rooms 8, 9, 10	ND	No	6 each	N/A	N/A

(1) S: surfacing, TSI: thermal system insulation, M: miscellaneous
(2) ND: not damaged, D: damaged, SD: significantly damaged
(3) POS: previously identified as positive, NEG: previously identified as negative, ASSUMED 1 = new material, not sampled, assumed asbestos-containing; ASSUMED 2 = not enough samples collected, material is assumed asbestos-containing
(4) For response actions 1–8 refer to "Response Action Ratings Sheet"

coffey environments
SPECIALISTS IN ENVIRONMENTAL, SOCIAL AND SAFETY PERFORMANCE

Client: Santa Monica-Malibu Unified School District
Project No.: 110-0006
Project Name: AHERA 3-year re-inspection-Webster ES

Building G

Material Class (1)	Material	Material Location	Current Assessment (2)	Friable (Y or N)	Approximate Quantity	Results (3) or Sample #	Recommendations/ Response Action (4)
S	Stucco	Exterior walls	ND	No	4,500 sq. ft.	<1% Chrysotile	8
M	Window putty	Exterior window on wet and south side	ND	No	300 ln. ft.	<1% Chrysotile	8
M	Gray with black dots floor sheeting	Kitchen	ND	No	1,200 sq. ft.	None detected	N/A
M	12" offwhite floor tile and mastic	Auditorium	ND	No	2,500 sq. ft.	Positive	8
M	9" dark tan floor tile and mastic	Janitors room	ND	No	80 sq. ft.	Positive	8
S	Rough plaster ceiling	Auditorium, kitchen, storage room, Teacher's work room, mechanical room	ND	Yes	1,900 sq. ft.	None detected	N/A
M	12" brown speckled floor tile and mastic	Auditorium east side	ND	No	300 sq. ft.	Assumed 1	8
M	4" blue covebase and glue	Auditorium	ND	No	50 ln. ft.	Assumed 1	8
S	Rough plaster walls	Storage room, mechanical room	ND	No	1,900 sq. ft.	None detected	N/A
S	Smooth plaster ceiling	Teacher's dining room and restrooms	ND	No	1,500 sq. ft.	None detected	N/A

coffey environments
SPECIALISTS IN ENVIRONMENTAL, SOCIAL AND SAFETY PERFORMANCE

Client: Santa Monica-Malibu Unified School District
Project No.: 110-0006
Project Name: AHERA 3-year re-inspection-Webster ES

Building G

Material Class (1)	Material	Material Location	Current Assessment (2)	Friable (Y or N)	Approximate Quantity	Results (3) or Sample #	Recommendations/ Response Action (4)
S	Stucco	Exterior walls	ND	No	4,500 sq. ft.	<1% Chrysotile	8
M	Window putty	Exterior window on wet and south side	ND	No	300 ln. ft.	<1% Chrysotile	8
M	Gray with black dots floor sheeting	Kitchen	ND	No	1,200 sq. ft.	None detected	N/A
M	12" offwhite floor tile and mastic	Auditorium	ND	No	2,500 sq. ft.	Positive	8
M	9" dark tan floor tile and mastic	Janitors room	ND	No	80 sq. ft.	Positive	8
S	Rough plaster ceiling	Auditorium, kitchen, storage room, Teacher's work room, mechanical room	ND	Yes	1,900 sq. ft.	None detected	N/A
M	12" brown speckled floor tile and mastic	Auditorium east side	ND	No	300 sq. ft.	Assumed 1	8
M	4" blue covebase and glue	Auditorium	ND	No	50 ln. ft.	Assumed 1	8
S	Rough plaster walls	Storage room, mechanical room	ND	No	1,900 sq. ft.	None detected	N/A
S	Smooth plaster ceiling	Teacher's dining room and restrooms	ND	No	1,500 sq. ft.	None detected	N/A

coffey environments
SPECIALISTS IN ENVIRONMENTAL, SOCIAL AND SAFETY PERFORMANCE

Client: Santa Monica-Malibu Unified School District
Project No.: 110-0006
Project Name: AHERA 3-year re-inspection-Webster ES

Building G

Material Class (1)	Material	Material Location	Current Assessment (2)	Friable (Y or N)	Approximate Quantity	Results (3) or Sample #	Recommendations/ Response Action (4)
S	Smooth plaster walls	Teacher's dining room, kitchen, teacher's work room, auditorium and restrooms, kiln room, stage area	ND	No	8,500 sq. ft.	None detected	N/A
M	Drywall	Storage area (no joint compound)	ND	No	60 sq. ft.	None detected	N/A
M	4 inch light gray cove base and glue	Dining room	ND	No	90 sq. ft.	None detected	N/A
M	12x12 pinkish with dark spots floor tile	Dining room	ND	No	700 sq. ft.	None detected	N/A
M	Hot brick	Kiln room, kiln unit	ND	No	30 sq. ft.	None detected	N/A
M	4 inch brown cove base and glue	Auditorium stage area	ND	No	170 ln. ft.	None detected	N/A
M	Heater unit	Mechanical room	ND	No	1 each	Assumed 1	8
M	Chalkboard mastic	All classrooms	ND	No	240 sq. ft.	Assumed 1	8

coffey environments
SPECIALISTS IN ENVIRONMENTAL, SOCIAL AND SAFETY PERFORMANCE

Client: Santa Monica-Malibu Unified School District
Project No.: 110-0006
Project Name: AHERA 3-year re-inspection-Webster ES

Building G

Material Class (1)	Material	Material Location	Current Assessment (2)	Friable (Y or N)	Approximate Quantity	Results (3) or Sample #	Recommendations/ Response Action (4)
M	12" straight peghole ceiling tile and mastic	Kitchen, SE storage area, teacher's work area, kiln room	ND	No	3,000 sq. ft.	None detected	N/A
M	12" fissured ceiling tile and mastic	Auditorium	ND	Yes	1,900 sq. ft.	None detected	N/A
M	HVAC exhaust vent pipe joint tape	Boiler room	ND	No	20 sq. ft.	None detected	N/A
M	12" black speckled floor tile and mastic	Kiln room	ND	No	200 sq. ft.	Assumed 1	8
M	4" black covebase and glue	Kiln room	ND	Yes	30 ln. ft.	Assumed 1	8

(1) S: surfacing, TSI: thermal system insulation, M: miscellaneous
(2) ND: not damaged, D: damaged, SD: significantly damaged
(3) POS: previously identified as positive, NEG: previously identified as negative, ASSUMED 1 = new material, not sampled, assumed asbestos-containing; ASSUMED 2 = not enough samples collected, material is assumed asbestos-containing
(4) For response actions 1–8 refer to "Response Action Ratings Sheet"

coffey environments
SPECIALISTS IN ENVIRONMENTAL, SOCIAL AND SAFETY PERFORMANCE

Client: Santa Monica-Malibu Unified School District
Project No.: 110-0006
Project Name: AHERA 3-year re-inspection-Webster ES

Building H

Material Class (1)	Material	Material Location	Current Assessment (2)	Friable (Y or N)	Approximate Quantity	Results (3) or Sample #	Recommendations/ Response Action (4)
S	Ext. wall stucco	Exterior walls	ND	No	4,000 sq. ft.	None detected	N/A
S	Rough plaster wall	Janitor's, electrical rooms	ND	No	800 sq. ft.	None detected	N/A
M	12" straight peg hole tile and mastic	Room 1-4	ND	Yes	800 sq. ft.	None detected	N/A
M	Window putty	Exterior windows	ND	No	2,800 ln. ft.	2% Chrysotile	8
M	Drywall with joint compound	Heater closets and south side soffit rooms 1-4	ND	No	950 sq. ft.	None detected	N/A
M	Gypsum ceiling board	above ceiling panels in rooms 1-4 (no joint compound observed)	ND	No	3,500 sq. ft.	None detected	N/A
S	Smooth plaster	Classroom 1-4, boy's and girl's restrooms	ND	No	7,600 sq. ft.	None detected	N/A
M	Brown floor tile and mastic	Rooms 1-4 under carpet	ND	No	2,800 sq. ft.	7% Chrysotile (tile) 2% Chrysotile (mastic)	8
M	12x12 light green floor tile and glue	Rooms 1-4	ND	No	1,000 sq. ft.	Assumed 1	8
M	4 inch dark green cove base and glue	Rooms 1-4 carpet area	ND	No	280 ln. ft.	Assumed 1	8
M	4 inch gray cove base and glue	Room 1-4 tiled area	ND	No	120 ln. ft.	Assumed 1	8

coffey environments
SPECIALISTS IN ENVIRONMENTAL, SOCIAL AND SAFETY PERFORMANCE

Client: Santa Monica-Malibu Unified School District
Project No.: 110-0006
Project Name: AHERA 3-year re-inspection-Webster ES

Building H

Material Class (1)	Material	Material Location	Current Assessment (2)	Friable (Y or N)	Approximate Quantity	Results (3) or Sample #	Recommendations/ Response Action (4)
M	HVAC duct tape	Rooms 1-4 heater closet	ND	No	4 each	Assumed 1	8
M	Carpet glue	Room 1-4	ND	No	900 sq. ft.	Assumed 1	8
M	Heater unit	Heater rooms in room 1-4	ND	No	4 each	Assumed	8
M	Chalkboard (dry erase)	Room 1-4	ND	No	8 each	N/A-non suspect	N/A
M	Sink undercoating	Rooms 1-4	ND	No	4 each	Positive	8

(1) S: surfacing, TSI: thermal system insulation, M: miscellaneous
(2) ND: not damaged, D: damaged, SD: significantly damaged
(3) POS: previously identified as positive, NEG: previously identified as negative, ASSUMED 1 = new material, not sampled, assumed asbestos-containing; ASSUMED 2 = not enough samples collected, material is assumed asbestos-containing
(4) For response actions 1–8 refer to "Response Action Ratings Sheet"

coffey environments
SPECIALISTS IN ENVIRONMENTAL, SOCIAL AND SAFETY PERFORMANCE

Client: Santa Monica-Malibu Unified School District
Project No.: 110-0006
Project Name: AHERA 3-year re-inspection-Webster ES

Portables 21, 22, 23

Material Class (1)	Material	Material Location	Current Assessment (2)	Friable (Y or N)	Approximate Quantity	Results (3) or Sample #	Recommendations/ Response Action (4)
M	Drywall	Portables 21, 22, 23 behind fiberboards	ND	No	3,600 sq. ft.	None detected	N/A
M	2x4 fissured ceiling panel	Portable 21	ND	No	900 sq. ft.	None detected	N/A
M	4 inch dark blue cove base and glue	Portables 21, 22, 23	ND	No	240 sq. ft.	None detected	N/A
M	Carpet glue	Portables 21, 22, 23	ND	No	3,400 sq. ft.	None detected	N/A
M	12x12 light blue speckled floor tile	Portable 22 at southwest and southeast sides	ND	No	30 sq. ft.	None detected	N/A

(1) S: surfacing, TSI: thermal system insulation, M: miscellaneous
(2) ND: not damaged, D: damaged, SD: significantly damaged
(3) POS: previously identified as positive, NEG: previously identified as negative, ASSUMED 1 = new material, not sampled, assumed asbestos-containing; ASSUMED 2 = not enough samples collected, material is assumed asbestos-containing
(4) For response actions 1–8 refer to "Response Action Ratings Sheet"

coffey environments
SPECIALISTS IN ENVIRONMENTAL, SOCIAL AND SAFETY PERFORMANCE

Client: Santa Monica-Malibu Unified School District
Project No.: 110-0006
Project Name: AHERA 3-year re-inspection-Webster ES

Walkways

Material Class (1)	Material	Material Location	Current Assessment (2)	Friable (Y or N)	Approximate Quantity	Results (3) or Sample #	Recommendations/ Response Action (4)
S	Walk way stucco ceiling	All walk ways	ND	No	4,800 sq. ft.	None detected	N/A

(1) S: surfacing, TSI: thermal system insulation, M: miscellaneous
(2) ND: not damaged, D: damaged, SD: significantly damaged
(3) POS: previously identified as positive, NEG: previously identified as negative, ASSUMED 1 = new material, not sampled, assumed asbestos-containing; ASSUMED 2 = not enough samples collected, material is assumed asbestos-containing
(4) For response actions 1–8 refer to "Response Action Ratings Sheet"

Appendix B

Previous Inspection Reports

ASBESTOS SURVEY
PROJECT RECORD

Webster Elementary School
3602 Winter Canyon Road
Malibu, California

Prepared for:

Santa Monica-Malibu Unified School District
1651 16th Street
Santa Monica, California 90404

Prepared by:

CTL Environmental Services
24404 South Vermont Avenue, Suite 307
Harbor City, California 90710
(310) 530-5006

March 27, 2008
CTL Project No. 107-0008

TABLE OF CONTENTS

EXECUTIVE SUMMARY

TABLES/APPENDICES

EXECUTIVE SUMMARY

CTL Environmental Services

24404 South Vermont Avenue, Suite 307 • Harbor City, CA 90710 • TEL: (310) 530-5006 • FAX: (310) 530-0792

REPORTED: March 27, 2008 **CTL PROJECT NO.:** 107-0008

CLIENT: Santa Monica-Malibu Unified School District
1651 16th Street
Santa Monica, California 90404

ATTENTION: Mr. Wally Berriman

REF: **Asbestos Survey**
Webster Elementary School
3602 Winter Canyon Road
Malibu, California

INVESTIGATION

On February 28, 2007, CTL Environmental Services (CTL) conducted an investigation for the presence of asbestos-containing materials (ACMs) at Webster Elementary School located in Malibu, California. The survey included the following:

(a) An initial investigation to locate suspect ACMs
(b) Physical assessment of suspect materials
(c) The collection of bulk samples from suspect materials
(d) Laboratory analysis of all collected samples

Santa Monica-Malibu Unified School District, located in Santa Monica, California, retained CTL for this investigation. Victor Sanchez, a Cal-OSHA Certified Site Surveillance Technician and EPA-accredited Building Inspector employed by CTL, conducted the sampling.

Prior sampling results of suspect materials, conducted by Cape Environmental, were submitted to CTL prior to the site visit. This report was reviewed, and conclusions based on that data were included in this report.

METHODOLOGY

The sampling was conducted using guidelines set forth in Federal Register *40 CFR Part 763*.

Based on the requirements of the United States Environmental Protection Agency (USEPA) as set forth in *40 CFR 763*, a homogeneous area is defined as "an area of surfacing material, thermal system insulation material, or miscellaneous material that is uniform in color and texture". Furthermore, the regulation requires that a minimum number of samples be collected from each

identified homogeneous area. If one sample in a homogeneous area is found to contain asbestos, the entire homogeneous area is considered to be asbestos-containing.

It is possible that one sample out of a set of samples collected from a homogeneous area can be positive for asbestos and the remaining samples in the homogeneous area are negative. However, the entire area must be considered as asbestos-containing.

Caution is advised in interpreting results provided herein.

Bulk samples collected from the subject site were subsequently analyzed by Polarized Light Microscopy (PLM) for asbestos content in accordance with the United States Environmental Protection Agency (EPA) *Determination of Asbestos in Bulk Building Materials: EPA/600/R-93/116, July 1993*, at AmeriSci Los Angeles, a NVLAP-accredited laboratory located in Carson, California.

RESULTS

The following materials were found to be asbestos-containing.

Building A

MATERIAL	SAMPLE NUMBER	MATERIAL LOCATION	ASBESTOS CONTENT
Stucco	7785-7788 & W2401	Exterior walls	None Detected-<1% Chrysotile
Gravel roof core	NA	Roof	Assumed
Roof mastic	NA	Roof penetrations	Assumed
Heater unit gasket	NA	Heater closets	Assumed

Building B

MATERIAL	SAMPLE NUMBER	MATERIAL LOCATION	ASBESTOS CONTENT
Gypsum walls with joint compound	W1002 & W1004	Classrooms, work rooms (dividing walls), toilets, and storage rooms in classrooms	None Detected-<1% Chrysotile
Drywall joint compound	7826-7828	Classrooms, work rooms (dividing walls), toilets, and storage rooms in classrooms	None Detected-3% Chrysotile
9" gray floor tile with yellow steaks	W0701	Work room 2 and 1	5% Chrysotile (tile), 10% Chrysotile (mastic)
Drywall	7834-7837	Heater rooms	None Detected (drywall), None Detected-3% Chrysotile (drywall joint compound)
Gravel roof core	NA	Roof	Assumed
Roof mastic	NA	Roof penetrations	Assumed

Building C

MATERIAL	SAMPLE NUMBER	MATERIAL LOCATION	ASBESTOS CONTENT
12" gray floor tile with brown streaks and mastic	W0801	Under carpets in ESL room and classroom 15	5% Chrysotile (tile), 10% Chrysotile (mastic)
Window putty	7810	Exterior windows	<1% Chrysotile
Drywall joint compound	7815-7817	Room 13-16 dividing walls, room 16A walls and ceilings, boy's, girl's, electrical room and custodian room ceilings	2% Chrysotile
Drywall/Drywall joint compound	7818-7821	Heater closet 1-4	None Detected (drywall), 2% Chrysotile (drywall joint compound)
Chalk board	NA	Rooms 13, 14, 15, 16 and 16A (ESL)	Assumed
Heater unit gasket	NA	Rooms 13, 14, 15, 16 and 16A (ESL)	Assumed
Gravel roof core	NA	Roof	Assumed
Roof mastic	NA	Roof penetrations	Assumed

Building D, Administration

MATERIAL	SAMPLE NUMBER	MATERIAL LOCATION	ASBESTOS CONTENT
12" brown floor tile with peach specks with mastic	W0901	Room 19 and 20 under carpet	<1% Chrysotile (tile), 5% Chrysotile (mastic)
9" dark tan with brown floor tile and mastic	W0401, W0501	Electrical room 4	5% Chrysotile (tile), 3% Chrysotile (mastic)
Window putty	7898	Exterior windows	2% Chrysotile
Heater unit gasket	NA	Heater room	Assumed
Gravel roof core	N/A	Roof	Assumed
Roof mastic	NA	Roof penetration	Assumed

Building E

MATERIAL	SAMPLE NUMBER	MATERIAL LOCATION	ASBESTOS CONTENT
Window putty	W3001	Exterior windows	4% Chrysotile
12" random peg hole wall tile glue	W1203	Heater closet	Assumed
Brown floor tile and mastic	7855	Room 7 under carpet	5% Chrysotile (tile), 2% Chrysotile (mastic)
Heater unit gasket	NA	Heater closet	Assumed
Gravel roof core	NA	Roof	Assumed
Roof mastic	NA	Roof penetration	Assumed
Chalk board (new, dry erase)	NA	Room 7	Assumed

Building F

MATERIAL	SAMPLE NUMBER	MATERIAL LOCATION	ASBESTOS CONTENT
Window putty	W3003	Exterior windows	7% Chrysotile
Brown floor tile and mastic	7868	Rooms 9 and 10 under carpet	5% Chrysotile (tile), 5% Chrysotile (mastic)
Heater unit gasket	NA	Mechanical room	Assumed
Gravel roof core	NA	Roof	Assumed
Roof mastic	NA	Roof penetration	Assumed

Building G, Auditorium

MATERIAL	SAMPLE NUMBER	MATERIAL LOCATION	ASBESTOS CONTENT
Stucco	7905-7909 & W2406-W2607	Exterior walls	None Detected- <1% Chrysotile
Window putty	7910	Exterior window on wet and south side	<1% Chrysotile
12" off-white floor tile and mastic	W0301	Auditorium	5% Chrysotile (tile), None Detected (mastic)
9" tan floor tile and mastic	W0101	Kitchen	4% Chrysotile (tile), None Detected (mastic)
9" dark tan floor tile and mastic	W0201	Janitors room	5% Chrysotile (tile), 2% Chrysotile (mastic)
Gravel roof core	NA	Roof	Assumed
Roof mastic	NA	Roof penetration	Assumed
Heater unit gasket	NA	Mechanical room	Assumed
Chalkboard mastic	N/A	All classrooms	Assumed

Building H

MATERIAL	SAMPLE NUMBER	MATERIAL LOCATION	ASBESTOS CONTENT
Window putty	7876	Exterior windows	2% Chrysotile
Brown floor tile and mastic	7888	Rooms 1-4 under carpet	7% Chrysotile (tile) 2% Chrysotile (mastic)
Heater unit gasket	NA	Heater rooms in room 1-4	Assumed
Gravel roof core	NA	Roof	Assumed
Roof mastic	NA	Roof penetrations	Assumed
Chalkboard (dry erase)	NA	Room 1-4	Assumed
Sink undercoating	W2801-W2803	Rooms 1-4	10%-15% Chrysotile

Walkways

MATERIAL	SAMPLE NUMBER	MATERIAL LOCATION	ASBESTOS CONTENT
Gravel roof core	NA	Walk way roof	Assumed
Roof mastic	NA	Walk way roof electrical conduit supports	Assumed

The results for all other materials sampled were reported as "None Detected" based upon the limitations of the analytical method. Please refer to the attached Material Inventory for a complete listing of materials sampled, locations and material conditions.

If any materials are found to contain greater than one-tenth of one percent of asbestos by weight as determined by Polarized Light Microscopy (PLM) method of analysis, Cal-OSHA mandates that the material(s) be treated as an asbestos-containing construction material (ACCM) and are subject to regulation under *CCR Title 8, Section 1529.*

If any materials are found to contain more than one percent asbestos by weight as determined by Polarized Light Microscopy (PLM) method of analysis, U.S. EPA mandates that the material(s) be treated as asbestos-containing materials (ACM) and are subject to regulation under *40 CFR 61.*

The Occupational Safety and Health Administration (OSHA) considers sheetrock (drywall) and joint compound to be separate materials and therefore must be analyzed separately for asbestos content (OSHA Standards Interpretation and Compliance Letters 04/28/1997 – Sheetrock and Joint Compound).

All repair and/or removal work and subsequent disposal should be performed by a licensed asbestos abatement contractor prior to any disturbance of any materials determined to contain asbestos.

For the ACMs identified in this report, dry sawing, sanding, or drilling should be avoided. Additional suspect materials may be exposed during demolition and/or renovation activities; such materials should be sampled and analyzed prior to further disturbance.

CONCLUSIONS AND RECOMMENDATIONS

Any damaged asbestos materials should be removed, repaired, encapsulated, or enclosed. The EPA also recommends that all asbestos materials be removed prior to any renovation or demolition activities that may impact the material. The EPA recommends a pro-active, in-place management program be put in place whenever asbestos is discovered in a building. Asbestos materials that are not damaged may be managed in place with a good operations and maintenance program.

ASSUMPTIONS AND LIMITATIONS

This report has been prepared for the exclusive use of Santa Monica-Malibu Unified School District. In performing our professional services, we have applied present engineering and scientific judgment and used a level of effort consistent with the standard of practice measured on the date of work in the locale of the project site for similar type studies.

CTL has relied in good faith upon representations and information furnished by individuals with respect to operations and existing property conditions to the extent that they have not been contradicted by data obtained from other sources. Accordingly, CTL accepts no responsibility for any deficiencies, omissions, misrepresentations, or fraudulent acts of persons interviewed. In addition, CTL will not accept liability for any loss, injury, claim, or damage arising directly or indirectly from any use or reliance on this report. CTL makes no warranty, expressed or implied.

Material quantities are in some cases listed within this document. These quantities are not intended to be used for removal bidding purposes. Nor is this document intended as a contract manual. Work methods and sequence, coordination of participants, applicable codes, engineering controls, required submittals, and notifications should in all cases be addressed in a separate and independent bidding and contract document.

If you have any questions, please feel free to contact the undersigned at (310) 530-5006. We appreciate the opportunity to be of service to Santa Monica-Malibu Unified School District.

Respectfully submitted by,
CTL Environmental Services

Victor Sanchez, CSST
Cal-OSHA Cert. #01-2872

Reviewed by,
CTL Environmental Services

Marie Tullai, CIH
Director, Workplace Health & Safety
Certified Asbestos Consultant
Cal-OSHA Cert. #92-0218

MT/mrw

THE AMERICAN BOARD OF INDUSTRIAL HYGIENE
INCORPORATED
CERT NO
9316 CP
EXPIRES
6-1-2008
PENNSYLVANIA 1960
MARIE ANN TULLAI, C.I.H.

APPENDIX A

MATERIAL INVENTORY:

SUMMARY OF BULK SAMPLE ANALYSIS
SAMPLE IDENTIFICATION
SAMPLE DESCRIPTION
ESTIMATED QUANTITIES

MATERIAL INVENTORY
ASBESTOS

CLIENT: Santa Monica-Malibu Unified School District
PROJECT NO: 107-0008
PROJECT NAME: Webster Elementary School - 3602 Winter Canyon Road, Malibu, California

Building A

MATERIAL	SAMPLE NUMBER	ASBESTOS CONTENT	SAMPLE LOCATION	MATERIAL LOCATION	APPROX. QTY.	FRIABLE	DAMAGE
Stucco	7785	<1% Chrysotile	Northeast	Exterior walls	3,000 sq. ft.	No	No
Stucco	7786	None detected	Northwest	Exterior walls	3,000 sq. ft.	No	No
Stucco	7787	None detected	Southwest	Exterior walls	3,000 sq. ft.	No	No
Stucco	7788	None detected	Southeast	Exterior walls	3,000 sq. ft.	No	No
Stucco	W2401	None detected	Previously sampled Cape Environmental 1993	Exterior walls	3,000 sq. ft.	No	No
Plaster	7789	None detected	Room 17, southeast	Room 17-20 and heater closets	3,500 sq. ft.	No	No
Plaster	7790	None detected	Room 18, northeast	Room 17-20 and heater closets	3,500 sq. ft.	No	No
Plaster	7791	None detected	Room 20, northeast	Room 17-20 and heater closets	3,500 sq. ft.	No	No
Plaster	7792	None detected	Heater closet 1, southwest	Room 17-20 and heater closets	3,500 sq. ft.	No	No
Plaster	7793	None detected	Heater closet 2, southwest	Room 17-20 and heater closets	3,500 sq. ft.	No	No
Drywall	7794	None detected	Room 20, northwest	Room 17, 18 and room 20 dividing walls	800 sq. ft.	No	No
Drywall joint compound	7795	None detected	Room 20, northwest	Room 17, 18 and room 20 dividing walls	800 sq. ft.	No	No
Drywall joint compound	7796	None detected	Room 17, southeast	Room 17, 18 and room 20 dividing walls	800 sq. ft.	No	No
Drywall joint compound	7797	None detected	Mechanical room, southeast	Room 17, 18 and room 20 dividing walls	800 sq. ft.	No	No
Carpet glue	7798	None detected	Room 20, center	Rooms 17-20	2,800 sq. ft.	No	No
12"x12" light green speckled floor tile and glue	7799	None detected	Room 17, northwest	Room 17, room 18 under carpet, room 20	2,200 sq. ft.	No	No
4 inch dark green cove base and glue	7800	None detected	Room 17, north center	Room 17, room 20, room 19	90 ln. ft.	No	No
4 inch brown cove base and glue	7801	None detected	Room 18, southwest	Room 18	75 ln. ft.	No	No
4 inch gray cove base and glue	7802	None detected	Room 20, southwest	Room 20, west end	30 ln. ft.	No	No
2'x4' fissured ceiling panel	7803	None detected	Room 19, center	Rooms 17-20	3,200 sq. ft.	No	No
HVAC duct tape (gray)	7804	None detected	Heater closet #3, center	Heater closets 1, 2, 3, 4	20 sq. ft.	No	No
Gravel roof core	NA	Assumed	Not sampled to avoid damage	Roof	4,250 sq. ft.	No	No
Roof mastic	NA	Assumed	Not sampled to avoid damage	Roof penetrations	25 sq. ft.	No	No

MATERIAL INVENTORY
ASBESTOS

CLIENT: Santa Monica-Malibu Unified School District
PROJECT NO: 107-0008
PROJECT NAME: Webster Elementary School - 3602 Winter Canyon Road, Malibu, California

Building A

MATERIAL	SAMPLE NUMBER	ASBESTOS CONTENT	SAMPLE LOCATION	MATERIAL LOCATION	APPROX. QTY.	FRIABLE	DAMAGE
Heater unit gasket	NA	Assumed	Not sampled to avoid damage	Heater closets	4 each	No	No
Window putty	7805	None detected	Northwest	Exterior windows	2,500 ln. ft.	No	No

Note: Flexible collars in heater closets consist of canvas material. Chalkboards are not the original, they are dry erase.

MATERIAL INVENTORY
ASBESTOS

CLIENT: Santa Monica-Malibu Unified School District
PROJECT NO: 107-0008
PROJECT NAME: Webster Elementary School - 3602 Winter Canyon Road, Malibu, California

Building B

MATERIAL	SAMPLE NUMBER	ASBESTOS CONTENT	SAMPLE LOCATION	MATERIAL LOCATION	APPROX. QTY.	FRIABLE	DAMAGE
Stucco	7822	None detected	Southeast	Exterior walls	2,200 sq. ft.	No	No
Stucco	7823	None detected	Northeast	Exterior walls	2,200 sq. ft.	No	No
Stucco	7824	None detected	Northwest	Exterior walls	2,200 sq. ft.	No	No
Stucco	7825	None detected	Southwest	Exterior walls	2,200 sq. ft.	No	No
Stucco	W2402	None detected	Previously sampled Cape Environmental 1993	Exterior walls	2,200 sq. ft.	No	No
Gypsum walls with joint compound	W1002	None detected	Previously sampled Cape Environmental 1993	Classrooms, work rooms (dividing walls), toilets, and storage rooms in classrooms	1,600 sq. ft.	No	No
Gypsum walls with joint compound	W1004	<1% Chrysotile	Previously sampled Cape Environmental 1993	Classrooms, work rooms (dividing walls), toilets, and storage rooms in classrooms	1,600 sq. ft.	No	No
Drywall joint compound	7826	None detected	Room 11 storage room, southwest	Classrooms, work rooms (dividing walls), toilets, and storage rooms in classrooms	1,600 sq. ft.	No	No
Drywall joint compound	7827	3% Chrysotile	Room 12 storage room, southeast	Classrooms, work rooms (dividing walls), toilets, and storage rooms in classrooms	1,600 sq. ft.	No	No
Drywall joint compound	7828	None detected	Room 11 toilet, northwest	Classrooms, work rooms (dividing walls), toilets, and storage rooms in classrooms	1,600 sq. ft.	No	No
Window putty	7829	None detected	Northeast	Exterior walls	1,200 sq. ft.	No	No
Drywall	7830	None detected	Storage room, northeast	Storage room	750 sq. ft.	No	No
Drywall joint compound	7831	None detected	Storage room, northeast	Storage room	750 sq. ft.	No	No
Drywall joint compound	7832	None detected	Storage room, northwest	Storage room	750 sq. ft.	No	No
Drywall joint compound	7833	None detected	Storage room, southwest	Storage room	750 sq. ft.	No	No
9" gray floor tile with yellow steaks	W0701	5% Chrysotile (tile) 10% Chrysotile (mastic)	Previously sampled Cape Environmental 1993	Work room 2 and 1	80 sq. ft.	No	No
Drywall	7834	None detected	Heater room 1, southwest	Heater rooms	600 sq. ft.	No	No
Drywall joint compound	7835	None detected	Heater room 1, southwest	Heater rooms	600 sq. ft.	No	No
Drywall joint compound	7836	None detected	Heater room 2, southeast	Heater rooms	600 sq. ft.	No	No
Drywall joint compound	7837	3% Chrysotile	Heater room 2, southwest	Heater rooms	600 sq. ft.	No	No
12"x12" light green floor tile and glue	Same as #7999	None detected	Building A	Room 11 and 12	500 sq. ft.	No	No

MATERIAL INVENTORY
ASBESTOS

CLIENT: Santa Monica-Malibu Unified School District
PROJECT NO: 107-0008
PROJECT NAME: Webster Elementary School - 3602 Winter Canyon Road, Malibu, California

Building B

MATERIAL	SAMPLE NUMBER	ASBESTOS CONTENT	SAMPLE LOCATION	MATERIAL LOCATION	APPROX. QTY.	FRIABLE	DAMAGE
4 inch dark green cove base and glue	Same as #7800	None detected	Building A	Room 11 and 12	180 sq. ft.	No	No
Carpet glue	Same as #7854	None detected	Building A	Room 11 and 12	1,800 sq. ft.	No	No
Carpet glue	Same as #7898	None detected	Building A	Room 11 and 12	1,800 sq. ft.	No	No
2'x4' fissured ceiling panel	Same as #7803	None detected	Building A	Room 11 and 12	2,300 sq. ft.	Yes	No
Heater unit gasket	Same as #7804	None detected	Building A	Heater closets	2 each	No	No
Gravel roof core	N/A	Assumed	Not sampled to avoid damage	Roof	2,600 sq. ft.	No	No
Roof mastic	N/A	Assumed	Not sampled to avoid damage	Roof penetrations	30 sq. ft.	No	No
Chalk boards	N/A	N/A	Dry erase type boards	Non-suspect ACM	N/A N/A	N/A	N/A
12" brown floor tile with white streaks	N/A	None detected	Previously sampled Cape Environmental 1993	Not observed/Removed	N/A N/A	N/A	N/A
12" random peg hole ceiling tile	N/A	None detected	Previously sampled Cape Environmental 1993	Removed with exception of minor amount along south side used for support conduits	10 sq. ft.	N/A	N/A

MATERIAL INVENTORY
ASBESTOS

CLIENT: Santa Monica-Malibu Unified School District
PROJECT NO: 107-0008
PROJECT NAME: Webster Elementary School - 3602 Winter Canyon Road, Malibu, California

Building C

MATERIAL	SAMPLE NUMBER	ASBESTOS CONTENT	SAMPLE LOCATION	MATERIAL LOCATION	APPROX. QTY.	FRIABLE	DAMAGE
Stucco	7806	None detected	Southwest	Exterior walls	3,900 sq. ft.	No	No
Stucco	7807	None detected	Southeast	Exterior walls	3,900 sq. ft.	No	No
Stucco	7808	None detected	Northeast	Exterior walls	3,900 sq. ft.	No	No
Stucco	7809	None detected	Northwest	Exterior walls	3,900 sq. ft.	No	No
Stucco	W2403	None detected	Previously sampled Cape Environmental 1993	Exterior walls	3,900 sq. ft.	No	No
12" gray floor tile with brown streaks and mastic	W0801	5% Chrysotile (tile) 10% Chrysotile (mastic)	Previously sampled Cape Environmental 1993	Under carpets in ESL room and classroom 15	800 sq. ft.	No	No
Exterior stucco ceiling	W2501-W2505	None detected	Previously sampled Cape Environmental 1993	Overhang ceilings-entire campus	3,500 sq. ft.	No	No
Window putty	7810	<1% Chrysotile	Southwest	Exterior windows	2,600 sq. ft.	No	No
12" random pin hole ceiling tile glue	7811	None detected	ESL room	ESL room	600 sq. ft.	Yes	No
12" random pinhole ceiling tile (new)	W1201	None detected	Previously sampled Cape Environmental 1993	Replacement in ESL classroom	20 sq. ft.	Yes	No
12" random pinhole ceiling tile	W1301-W1303	None detected	Previously sampled Cape Environmental 1993	ESL classroom	560 sq. ft.	Yes	No
Rough plaster	7812	None detected	Custodian room, northwest	Boy's, Girl's, custodian room and electrical room	950 sq. ft.	No	No
Rough plaster	7813	None detected	Boy's, northwest	Boy's, Girl's, custodian room and electrical room	950 sq. ft.	No	No
Rough plaster	7814	None detected	Girl's, north center	Boy's, Girl's, custodian room and electrical room	950 sq. ft.	No	No
HVAC duct tape	Same as #7804	None detected	Building A	Heater closets	4 each	No	No
Drywall joint compound	7815	2% Chrysotile	Room 13, southwest	Room 13-16 dividing walls, room 16A walls and ceilings, boy's, girl's, electrical room and custodian room ceilings	3,100 sq. ft.	No	No
Drywall joint compound	7816	Not analyzed/positive stop	Room 15, southeast	Room 13-16 dividing walls, room 16A walls and ceilings, boy's, girl's, electrical room and custodian room ceilings	3,100 sq. ft.	No	No

MATERIAL INVENTORY
ASBESTOS

CLIENT: Santa Monica-Malibu Unified School District
PROJECT NO: 107-0008
PROJECT NAME: Webster Elementary School - 3602 Winter Canyon Road, Malibu, California

Building C

MATERIAL	SAMPLE NUMBER	ASBESTOS CONTENT	SAMPLE LOCATION	MATERIAL LOCATION	APPROX. QTY.	FRIABLE	DAMAGE
Drywall joint compound	7817	Not analyzed/positive stop	Room 16, northwest	Room 13-16 dividing walls, room 16A walls and ceilings, boy's, girl's, electrical room and custodian room ceilings	3,100 sq. ft.	No	No
Drywall	7818	None detected	Heater closet 1, southwest	Heater closet 1-4	700 sq. ft.	No	No
Drywall joint compound	7819	2% Chrysotile	Heater closet 1, southwest	Heater closet 1-4	700 sq. ft.	No	No
Drywall joint compound	7820	Not analyzed/positive stop	Heater closet 2, southeast	Heater closet 1-4	700 sq. ft.	No	No
Drywall joint compound	7821	Not analyzed/positive stop	Heater closet 4, southwest	Heater closet 1-4	700 sq. ft.	No	No
12"x12" light speckled green floor tile and glue	Same as #7799	None detected	Building A	Rooms 13, 14, 15, 16	800 sq. ft.	No	No
4 inch dark green cove base and glue	Same as #7800	None detected	Building A	Rooms 13, 14, 15, 16	240 ln. ft.	No	No
4 inch gray cove base and glue	Same as #7802	None detected	Building A	ESL room (16A)	70 ln. ft.	No	No
2'x4' fissured ceiling panel	Same as #7803	None detected	Building A	Room 13-16	3,800 sq. ft.	Yes	No
Chalk board *	NA	Assumed	Not sampled to avoid damage	Rooms 13, 14, 15, 16 and 16A (ESL)	9 each	No	No
Heater unit gasket	NA	Assumed	Not sampled to avoid damage	Rooms 13, 14, 15, 16 and 16A (ESL)	5 each	No	No
Gravel roof core	NA	Assumed	Not sampled to avoid damage	Roof	4,750 sq. ft.	No	No
Roof mastic	NA	Assumed	Not sampled to avoid damage	Roof penetrations	50 sq. ft.	No	No

Note: Flexible collars in heater closets consist of vinyl materials (4 each).
*** Not original chalkboards (dry erase boards).**

MATERIAL INVENTORY
ASBESTOS

CLIENT: Santa Monica-Malibu Unified School District
PROJECT NO: 107-0008
PROJECT NAME: Webster Elementary School - 3602 Winter Canyon Road, Malibu, California

Building D, Administration

MATERIAL	SAMPLE NUMBER	ASBESTOS CONTENT	SAMPLE LOCATION	MATERIAL LOCATION	APPROX. QTY.	FRIABLE	DAMAGE
Stucco	7889	None detected	Northeast	Exterior walls	2,950 sq. ft.	No	No
Stucco	7890	None detected	North center	Exterior walls	2,950 sq. ft.	No	No
Stucco	7891	None detected	Northwest	Exterior walls	2,950 sq. ft.	No	No
Stucco	7892	None detected	Southwest	Exterior walls	2,950 sq. ft.	No	No
Stucco	7893	None detected	Southeast	Exterior walls	2,950 sq. ft.	No	No
Exterior stucco overhang	W2501-W2505	None detected	Previously sampled Cape Environmental 1993	All exterior overhang ceilings	2,500 sq. ft.	No	No
12" brown floor tile with peach specks with mastic	W0501	<1% Chrysotile (tile) 5% Chrysotile (mastic)	Previously sampled Cape Environmental 1993	Room 19 and 20 under carpet	600 sq. ft.	No	No
Rough plaster ceiling	7894	None detected	Heater closet, southeast	Heater closet and electrical room	700 sq. ft.	No	No
Rough plaster ceiling	7895	None detected	Electrical room, southeast	Heater closet and electrical room	700 sq. ft.	No	No
Rough plaster ceiling	7896	None detected	Electrical room, northeast	Heater closet and electrical room	700 sq. ft.	No	No
9" dark tan with brown floor tile and mastic	W0401, W0501	5% Chrysotile (tile) 3% Chrysotile (mastic)	Previously sampled Cape Environmental 1993	Electrical room 4	40 sq. ft.	No	Yes
Smooth plaster	W3202, W3204	N/A	Previously sampled Cape Environmental 1993	Material not observed as stated in the previous survey	N/A N/A	N/A	N/A
Smooth plaster ceiling	W2201, W2204	N/A	Previously sampled Cape Environmental 1993	Material not observed as stated in the previous survey	N/A N/A	N/A	N/A
4 inch brown cove base with glue	7897	None detected	Electrical room, northeast	Electrical room	20 ln. ft.	No	Yes
Window putty	7898	2% Chrysotile	North center	Exterior windows	200 ln. ft.	No	Yes
Drywall	7899	None detected	Nurses office, northwest	All dividing walls, except electrical room and heater closets	3,800 sq. ft.	No	No
Drywall joint compound	7900	None detected	Nurses office, northwest	All dividing walls, except electrical room and heater closets	3,800 sq. ft.	No	No
Drywall joint compound	7901	None detected	Main office, southwest	All dividing walls, except electrical room and heater closets	3,800 sq. ft.	No	No

MATERIAL INVENTORY
ASBESTOS

CLIENT: Santa Monica-Malibu Unified School District
PROJECT NO: 107-0008
PROJECT NAME: Webster Elementary School - 3602 Winter Canyon Road, Malibu, California

Building D, Administration

MATERIAL	SAMPLE NUMBER	ASBESTOS CONTENT	SAMPLE LOCATION	MATERIAL LOCATION	APPROX. QTY.	FRIABLE	DAMAGE
Drywall joint compound	7902	None detected	Hall, northeast	All dividing walls, except electrical room and heater closets	3,800 sq. ft.	No	No
Drywall joint compound	7903	None detected	Work room, southeast	All dividing walls, except electrical room and heater closets	3,800 sq. ft.	No	No
Drywall joint compound	7904	None detected	Work room restrooms entrance	All dividing walls, except electrical room and heater closets	3,800 sq. ft.	No	No
4 inch gray cove base and glue	Same as #7802	None detected	Building A	Nurses office, audio testing room, work room, principals office, main office and hall	280 ln. ft.	No	No
HVAC duct tape	Same as #7804	None detected	Building A	Heater room	5 sq. ft.	No	No
2'x4' fissured ceiling panel	Same as #7803	None detected	Building A	Nurses office, audio testing room, work room, main office, principals office and hall	1,800 sq. ft.	Yes	No
Heater unit gasket	NA	Assumed	Not sampled to avoid damage	Heater room	1 each	No	No
Gravel roof core	NA	Assumed	Not sampled to avoid damage	Roof	1,800 sq. ft.	No	No
Roof mastic	NA	Assumed	Not sampled to avoid damage	Roof penetration	25 sq. ft.	No	No
12"x12" light green floor tile and glue	Same as #7799	None detected	Building A	Principal office, main office, nurses office, work room, hall	1,400 sq. ft.	No	No
12"x12" straight peg hole ceiling tile and mastic	W1502, W1603	None detected	Previously sampled Cape Environmental 1993	Not observed/Removed	N/A N/A	N/A	N/A
Rough plaster ceiling	W2005	None detected	Previously sampled Cape Environmental 1993	Removed/Replaced with drywall	N/A N/A	N/A	N/A
12" random peg hole ceiling tile (old)	W1701, W1702, W1703	None detected	Previously sampled Cape Environmental 1993	Not observed	N/A N/A	N/A	N/A

MATERIAL INVENTORY
ASBESTOS

CLIENT: Santa Monica-Malibu Unified School District
PROJECT NO: 107-0008
PROJECT NAME: Webster Elementary School - 3602 Winter Canyon Road, Malibu, California

Building E

MATERIAL	SAMPLE NUMBER	ASBESTOS CONTENT	SAMPLE LOCATION	MATERIAL LOCATION	APPROX. QTY.	FRIABLE	DAMAGE
Stucco	7838	None detected	Northwest	Exterior walls	1,950 sq. ft	No	No
Stucco	7839	None detected	Northeast	Exterior walls	1,950 sq. ft	No	No
Stucco	7840	None detected	Entrance to computer room	Exterior walls	1,950 sq. ft	No	No
Stucco	7841	None detected	Southeast	Exterior walls	1,950 sq. ft	No	No
Stucco	7842	None detected	Southwest	Exterior walls	1,950 sq. ft	No	No
Exterior stucco ceiling	W2501-W2505	None detected	Previously sampled Cape Environmental 1993	Overhang ceilings-entire site	2,900 sq. ft	No	No
Gypsum wall with joint compound	W1005	None detected	Previously sampled Cape Environmental 1993	Office 2, east wall computer room walls	480 sq. ft	No	No
Drywall	7843	None detected	Office 2, east center	Office 2, east wall computer room walls	480 sq. ft	No	No
Drywall joint compound	7844	None detected	Office 2, east center	Office 2, east wall computer room walls	480 sq. ft	No	No
Drywall joint compound	7845	None detected	Computer room, southeast	Office 2, east wall computer room walls	480 sq. ft	No	No
Drywall joint compound	7846	None detected	Computer room, south center	Office 2, east wall computer room walls	480 sq. ft	No	No
Window putty	W3001	4% Chrysotile	Previously sampled Cape Environmental 1993	Exterior windows	800 lin. ft.	No	Yes
Rough plaster walls	W2104	None detected	Previously sampled Cape Environmental 1993	Library and room, east and west walls only (north and south walls are concrete)	2,950 sq. ft	No	No
Rough plaster walls	W2105	None detected	Previously sampled Cape Environmental 1993	Library and room, east and west walls only (north and south walls are concrete)	2,950 sq. ft	No	No
Rough plaster walls	7847	None detected	Library, northwest	Library and room, east and west walls only (north and south walls are concrete)	2,950 sq. ft	No	No
Rough plaster walls	7848	None detected	Room 7, west center	Library and room, east and west walls only (north and south walls are concrete)	2,950 sq. ft	No	No
Rough plaster walls	7849	None detected	Room 7, southeast	Library and room, east and west walls only (north and south walls are concrete)	2,950 sq. ft	No	No

MATERIAL INVENTORY
ASBESTOS

CLIENT: Santa Monica-Malibu Unified School District
PROJECT NO: 107-0008
PROJECT NAME: Webster Elementary School - 3602 Winter Canyon Road, Malibu, California

Building E

MATERIAL	SAMPLE NUMBER	ASBESTOS CONTENT	SAMPLE LOCATION	MATERIAL LOCATION	APPROX. QTY.	FRIABLE	DAMAGE
Smooth plaster walls	W2301	None detected	Previously sampled Cape Environmental 1993	Office 1, 2 and heater closet	2,400 sq. ft	No	No
Smooth plaster walls	7850	None detected	Office 1, northeast	Office 1, 2 and heater closet	2,400 sq. ft	No	No
Smooth plaster walls	7851	None detected	Office 2, northwest	Office 1, 2 and heater closet	2,400 sq. ft	No	No
Smooth plaster walls	7852	None detected	Office 2, southeast	Office 1, 2 and heater closet	2,400 sq. ft	No	No
Smooth plaster walls	7853	None detected	Heater closet, southwest	Office 1, 2 and heater closet	2,400 sq. ft	No	No
12" random peg hole wall tile glue	W1203	Assumed	N/A	Heater closet	100 sq. ft	No	No
Carpet glue	7854	None detected	Room 7, center	Room 7	900 sq. ft	No	No
Brown floor tile and mastic	7855	5% Chrysotile (tile) 2% Chrysotile (mastic)	Room 7, center	Room 7 under carpet	900 sq. ft	No	No
12"x12" gray speckled floor tile	7856	None detected	Office 2, southwest	Office 1 and 2	700 sq. ft	No	No
12"x12" light green floor tile and glue	Same as #7999	None detected	Building A	Room 7	250 sq. ft	No	No
4 inch dark green cove base and glue	Same as #7800	None detected	Building A	Library, office 1, 2 computer room	400 ln. ft.	No	No
4 inch gray cove base and glue	Same as #7802	None detected	Building A	Room 7	80 ln. ft.	No	No
HVAC duct tape	Same as #7804	None detected	Building A	Heater closet	2 sq. ft	No	No
2'x4' fissured ceiling panel	Same as #7803	None detected	Building A	Library, room 7	3,000 sq. ft	Yes	No
Heater unit gasket	NA	Assumed	Not sampled to avoid damage	Heater closet	1 each	No	No
Gravel roof core	NA	Assumed	Not sampled to avoid damage	Roof	3,400 sq. ft	No	No
Roof mastic	NA	Assumed	Not sampled to avoid damage	Roof penetration	20 sq. ft	No	No
Chalk board (new, dry erase)	NA	Assumed	Not sampled to avoid damage	Room 7	2 each	No	No

MATERIAL INVENTORY
ASBESTOS

CLIENT: Santa Monica-Malibu Unified School District
PROJECT NO: 107-0008
PROJECT NAME: Webster Elementary School - 3602 Winter Canyon Road, Malibu, California

Building F

MATERIAL	SAMPLE NUMBER	ASBESTOS CONTENT	SAMPLE LOCATION	MATERIAL LOCATION	APPROX. QTY.	FRIABLE	DAMAGE
Stucco	7857	None detected	Northeast	Exterior walls	2,200 sq. ft.	No	No
Stucco	7858	None detected	Southeast	Exterior walls	2,200 sq. ft.	No	No
Stucco	7859	None detected	Northwest	Exterior walls	2,200 sq. ft.	No	No
Stucco	7860	None detected	Southwest	Exterior walls	2,200 sq. ft.	No	No
Stucco	7861	None detected	West center	Exterior walls	2,200 sq. ft.	No	No
Rough plaster walls	W2102	None detected	Previously sampled Cape Environmental 1993	Classrooms, janitors closet and mechanical room	2,500 sq. ft.	No	No
Rough plaster walls	W2106	None detected	Previously sampled Cape Environmental 1993	Classrooms, janitors closet and mechanical room	2,500 sq. ft.	No	No
Rough plaster walls	W2107	None detected	Previously sampled Cape Environmental 1993	Classrooms, janitors closet and mechanical room	2,500 sq. ft.	No	No
Rough plaster walls	7866	None detected	Room 9, northwest	Classrooms, janitors closet and mechanical room	2,500 sq. ft.	No	No
Rough plaster walls	7867	None detected	Mechanical room, north center	Classrooms, janitors closet and mechanical room	2,500 sq. ft.	No	No
Window putty	W3003	7% Chrysotile	Previously sampled Cape Environmental 1993	Exterior windows	300 ln. ft.	No	No
Smooth plaster ceiling	W2203	None detected	Previously sampled Cape Environmental 1993	Boy's restrooms and girl's restrooms, ceilings	500 sq. ft.	No	No
Smooth plaster ceiling	7862	None detected	Boy's, northwest	Boy's restrooms and girl's restrooms, ceilings	500 sq. ft.	No	No
Smooth plaster ceiling	7863	None detected	Girl's, northwest	Boy's restrooms and girl's restrooms, ceilings	500 sq. ft.	No	No
Smooth plaster wall	W2303	None detected	Previously sampled Cape Environmental 1993	Boy's and girl's walls	950 sq. ft.	No	No
Smooth plaster wall	7864	None detected	Girl's, north center	Boy's and girl's walls	950 sq. ft.	No	No
Smooth plaster wall	7865	None detected	Boy's, southeast	Boy's and girl's walls	950 sq. ft.	No	No
Brown floor tile and mastic	7868	5% Chrysotile (tile) 5% Chrysotile (mastic)	Room 10, center	Rooms 9 and 10 under carpet	1,600 sq. ft.	No	No
12" straight peg hole ceiling and glue	7869	None detected	Room 9, south center	Rooms 8, 9, 10 north and south perimeter and residual ceiling tiles	700 sq. ft.	Yes	Yes
Drywall	7870	None detected	Room 9, center	Rooms 8, 9, 10 north and south perimeter and residual drywall	700 sq. ft.	No	No

MATERIAL INVENTORY
ASBESTOS

CLIENT: Santa Monica-Malibu Unified School District
PROJECT NO: 107-0008
PROJECT NAME: Webster Elementary School - 3602 Winter Canyon Road, Malibu, California

Building F

MATERIAL	SAMPLE NUMBER	ASBESTOS CONTENT	SAMPLE LOCATION	MATERIAL LOCATION	APPROX. QTY.	FRIABLE	DAMAGE
12"x12" light green floor tile and glue	Same as #7999	None detected	Building A	Rooms 8, 9, 10	750 sq. ft.	No	No
4 inch dark green cove base and glue	Same as #7800	None detected	Building A	Rooms 8, 9, 10 carpeted area	240 ln. ft.	No	No
4 inch gray cove base and glue	Same as #7802	None detected	Building A	Rooms 8, 9, 10 tiled area	90 ln. ft.	No	No
HVAC duct tape	Same as #7804	None detected	Building A	Mechanical room	5 sq. ft.	No	No
Carpet glue	Same as #7854	None detected	Building E	Rooms 8, 9, 10	2,700 sq. ft.	No	No
Carpet glue	Same as #7798	None detected	Building A	Rooms 8, 9, 10	2,700 sq. ft.	No	No
2x4 fissured ceiling panel	Same as #7803	None detected	Building A	Rooms 8, 9, 10	3,400 sq. ft.	Yes	No
Heater unit gasket	NA	Assumed	Not sampled to avoid damage	Mechanical room	1 each	No	No
Gravel roof core	NA	Assumed	Not sampled to avoid damage	Roof	4,200 sq. ft.	No	No
Roof mastic	NA	Assumed	Not sampled to avoid damage	Roof penetration	200 sq. ft.	No	No
Chalk board	NA	Assumed	Non -suspect ACM (dry-erase)	Rooms 8, 9, 10	6 each	N/A	N/A
Ceiling tile	7869	None detected	Previously sampled Cape Environmental 1993	Not observed/Removed	N/A N/A	N/A	N/A
Drywall	7870	None detected	Previously sampled Cape Environmental 1993	Not observed/Removed	N/A N/A	N/A	N/A

MATERIAL INVENTORY
ASBESTOS

CLIENT: Santa Monica-Malibu Unified School District
PROJECT NO: 107-0008
PROJECT NAME: Webster Elementary School - 3602 Winter Canyon Road, Malibu, California

Building G, Auditorium

MATERIAL	SAMPLE NUMBER	ASBESTOS CONTENT	SAMPLE LOCATION	MATERIAL LOCATION	APPROX. QTY.	FRIABLE	DAMAGE
Stucco	7905	None detected	Northeast	Exterior walls	4,500 sq. ft.	No	No
Stucco	7906	None detected	Northwest	Exterior walls	4,500 sq. ft.	No	No
Stucco	7907	None detected	South center	Exterior walls	4,500 sq. ft.	No	No
Stucco	7908	None detected	Southeast	Exterior walls	4,500 sq. ft.	No	No
Stucco	7909	<1% Chrysotile	Southwest	Exterior walls	4,500 sq. ft.	No	No
Stucco	W2406-W2607	None detected	Previously sampled Cape Environmental 1993	Exterior walls	4,500 sq. ft.	No	No
Stucco	W2501-W2505	None detected	Previously sampled Cape Environmental 1993	Overhang ceilings	2,900 sq. ft.	No	No
Window putty	7910	<1% Chrysotile	Southwest	Exterior window on west and south sides	300 ln. ft.	No	Yes
Gray with black dots floor sheeting	7911	None detected	Kitchen, south center	Kitchen	1,200 sq. ft.	No	No
12" off-white floor tile and mastic	W0301	5% Chrysotile (tile) None detected (mastic)	Previously sampled Cape Environmental 1993	Auditorium	2,500 sq. ft.	No	No
9" tan floor tile and mastic	W0101	4% Chrysotile (tile) None detected (mastic)	Previously sampled Cape Environmental 1993	Kitchen	300 sq. ft.	No	No
9" dark tan floor tile and mastic	W0201	5% Chrysotile (tile) 2% Chrysotile (mastic)	Previously sampled Cape Environmental 1993	Janiters room	80 sq. ft.	No	Yes
Rough plaster ceiling	W2001	None detected	Previously sampled Cape Environmental 1993	Auditorium, kitchen, storage room, Teacher's work room, mechanical room	1,900 sq. ft.	No	No
Rough plaster ceiling	W2002	None detected	Previously sampled Cape Environmental 1993	Auditorium, kitchen, storage room, Teacher's work room, mechanical room	1,900 sq. ft.	No	No
Rough plaster ceiling	W2003	None detected	Previously sampled Cape Environmental 1993	Auditorium, kitchen, storage room, Teacher's work room, mechanical room	1,900 sq. ft.	No	No
Rough plaster ceiling	W2004	None detected	Previously sampled Cape Environmental 1993	Auditorium, kitchen, storage room, Teacher's work room, mechanical room	1,900 sq. ft.	No	No
Rough plaster ceiling	7912	None detected	Mechanical room, northwest	Auditorium, kitchen, storage room, Teacher's work room, mechanical room	1,900 sq. ft.	No	No

MATERIAL INVENTORY
ASBESTOS

CLIENT: Santa Monica-Malibu Unified School District
PROJECT NO: 107-0008
PROJECT NAME: Webster Elementary School - 3602 Winter Canyon Road, Malibu, California

Building G, Auditorium

MATERIAL	SAMPLE NUMBER	ASBESTOS CONTENT	SAMPLE LOCATION	MATERIAL LOCATION	APPROX. QTY.	FRIABLE	DAMAGE
Rough plaster walls	W2103	None detected	Previously sampled Cape Environmental 1993	Storage room, mechanical room	1,900 sq. ft.	No	No
Rough plaster walls	7913	None detected	Mechanical room, north center	Storage room, mechanical room	1,900 sq. ft.	No	No
Rough plaster walls	7914	None detected	Mechanical room, southeast	Storage room, mechanical room	1,900 sq. ft.	No	No
Rough plaster walls	7915	None detected	Storage room, northwest	Storage room, mechanical room	1,900 sq. ft.	No	No
Rough plaster walls	7916	None detected	Storage room, southeast	Storage room, mechanical room	1,900 sq. ft.	No	No
Smooth plaster ceiling	W2202	None detected	Previously sampled Cape Environmental 1993	Teacher's dining room and restrooms	1,500 sq. ft.	No	No
Smooth plaster ceiling	W2205	None detected	Previously sampled Cape Environmental 1993	Teacher's dining room and restrooms	1,500 sq. ft.	No	No
Smooth plaster ceiling	7917	None detected	Teacher's dining room, northeast	Teacher's dining room and restrooms	1,500 sq. ft.	No	No
Smooth plaster ceiling	7918	None detected	Teacher's dining room, southwest	Teacher's dining room and restrooms	1,500 sq. ft.	No	No
Smooth plaster ceiling	7919	None detected	Boy's restroom, northwest	Teacher's dining room and restrooms	1,500 sq. ft.	No	No
Smooth plaster walls	7920	None detected	Teachers dining room, southwest	Teacher's dining room, kitchen, teacher's work room, auditorium and restrooms, kiln room, stage area	8,500 sq. ft.	No	No
Smooth plaster walls	7921	None detected	Kitchen, south center	Teacher's dining room, kitchen, teacher's work room, auditorium and restrooms, kiln room, stage area	8,500 sq. ft.	No	No
Smooth plaster walls	7922	None detected	Boy's restroom, southeast	Teacher's dining room, kitchen, teacher's work room, auditorium and restrooms, kiln room, stage area	8,500 sq. ft.	No	No
Smooth plaster walls	7923	None detected	Stage area, northwest	Teacher's dining room, kitchen, teacher's work room, auditorium and restrooms, kiln room, stage area	8,500 sq. ft.	No	No

MATERIAL INVENTORY
ASBESTOS

CLIENT: Santa Monica-Malibu Unified School District
PROJECT NO: 107-0008
PROJECT NAME: Webster Elementary School - 3602 Winter Canyon Road, Malibu, California

Building G, Auditorium

MATERIAL	SAMPLE NUMBER	ASBESTOS CONTENT	SAMPLE LOCATION	MATERIAL LOCATION	APPROX. QTY.	FRIABLE	DAMAGE
Smooth plaster walls	7924	None detected	Auditorium, east center	Teacher's dining room, kitchen, teacher's work room, auditorium and restrooms, kiln room, stage area	8,500 sq. ft.	No	No
Smooth plaster walls	7925	None detected	Kiln room, northwest	Teacher's dining room, kitchen, teacher's work room, auditorium and restrooms, kiln room, stage area	8,500 sq. ft.	No	No
Smooth plaster walls	W2305	None detected	Previously sampled Cape Environmental 1993	Teacher's dining room, kitchen, teacher's work room, auditorium and restrooms, kiln room, stage area	8,500 sq. ft.	No	No
Drywall	7926	None detected	Storage area, center	Storage area (no joint compound)	60 sq. ft.	No	No
4 inch light gray cove base and glue	7927	None detected	Dining room, northeast	Dining room	90 ln. ft.	No	No
12"x12" pinkish with dark spots floor tile	7928	None detected	Dining room, east center	Dining room, 70	700 sq. ft.	No	No
Hot brick	7929	None detected	Kiln room, northeast	Kiln room, kiln unit	30 sq. ft.	No	No
4 inch brown cove base and glue	7930	None detected	Auditorium, west center	Auditorium	170 ln. ft.	No	No
Gravel roof core	NA	Assumed	Not sampled to avoid damage	Roof	4,900 sq. ft.	No	No
Roof mastic	NA	Assumed	Not sampled to avoid damage	Roof penetration	50 sq. ft.	No	No
Heater unit gasket	NA	Assumed	Not sampled to avoid damage	Mechanical room	1 each	No	No
Chalkboard mastic	N/A	Assumed	Not sampled to avoid damage	All classrooms	240 sq. ft.	No	No
12" straight peg hole ceiling tile and mastic	W1501, W1602	None detected	Previously sampled Cape Environmental 1993	Kitchen, SE storage area, teacher's work area, kiln room	3,000 sq. ft.	No	No
12" fissured ceiling tile	W1801-W1803	None detected	Previously sampled Cape Environmental 1993	Auditorium	1,900 sq. ft.	No	No
Mastic associated with 12" fissured ceiling tile	W1901-W1903	None detected	Previously sampled Cape Environmental 1993	Auditorium	1,900 sq. ft.	No	No
HVAC exhaust vent pipe joint tape	W3202	None detected	Previously sampled Cape Environmental 1993	Boiler room	20 sq. ft.	No	No

MATERIAL INVENTORY
ASBESTOS

CLIENT: Santa Monica-Malibu Unified School District
PROJECT NO: 107-0008
PROJECT NAME: Webster Elementary School - 3602 Winter Canyon Road, Malibu, California

Building G, Auditorium

MATERIAL	SAMPLE NUMBER	ASBESTOS CONTENT	SAMPLE LOCATION	MATERIAL LOCATION	APPROX. QTY.	FRIABLE	DAMAGE
Pipe insulation	W3301	None detected	Previously sampled Cape Environmental 1993	Outside kitchen	<6 ln. ft.	No	No
Pipe fitting insulation	W3401	None detected	Previously sampled Cape Environmental 1993	Outside kitchen	<6 ln. ft.	No	No

MATERIAL INVENTORY
ASBESTOS

CLIENT: Santa Monica-Malibu Unified School District
PROJECT NO: 107-0008
PROJECT NAME: Webster Elementary School - 3602 Winter Canyon Road, Malibu, California

Building H

MATERIAL	SAMPLE NUMBER	ASBESTOS CONTENT	SAMPLE LOCATION	MATERIAL LOCATION	APPROX. QTY.	FRIABLE	DAMAGE
Exterior wall stucco	W2404	None detected	Previously sampled Cape Environmental 1993	Exterior walls	4,000 sq. ft.	No	No
Exterior wall stucco	W2405	None detected	Previously sampled Cape Environmental 1993	Exterior walls	4,000 sq. ft.	No	No
Exterior wall stucco	7871	None detected	Northeast	Exterior walls	4,000 sq. ft.	No	No
Exterior wall stucco	7872	None detected	South center	Exterior walls	4,000 sq. ft.	No	No
Exterior wall stucco	7873	None detected	Northwest	Exterior walls	4,000 sq. ft.	No	No
Exterior ceiling stucco	W2501-W2505	None detected	Previously sampled Cape Environmental 1993	Overhang ceilings	2,900 sq. ft.	No	No
Rough plaster wall	W2101	<1% Chrysotile	Previously sampled Cape Environmental 1993	Janitor's, electrical rooms	200 sq. ft.	No	No
Rough plaster ceiling	W2006	None detected	Previously sampled Cape Environmental 1993	Janitor's, electrical rooms	800 sq. ft.	No	No
Rough plaster wall	7874	None detected	Custodian room, northeast	Janitor's, electrical rooms	800 sq. ft.	No	No
Rough plaster wall	7875	None detected	Electrical room, south center	Janitor's, electrical rooms	800 sq. ft.	No	No
12" straight peg hole tile and mastic	W1503	None detected	Previously sampled Cape Environmental 1993	Rooms 1-4 - above ceiling panels	800 sq. ft.	No	No
Window putty	7876	2% Chrysotile	North center	Exterior windows	2,800 ln. ft.	No	Yes
Drywall	7877	None detected	Room 2, southwest	Heater closets and south side soffits rooms 1-4	950 sq. ft.	No	No
Drywall joint compound	7878	None detected	Room 2, southwest	Heater closets and south side soffits rooms 1-4	950 sq. ft.	No	No
Drywall joint compound	7879	None detected	Room 4, southwest	Heater closets and south side soffits rooms 1-4	950 sq. ft.	No	No
Drywall joint compound	7880	None detected	Room 1, southwest	Heater closets and south side soffits rooms 1-4	950 sq. ft.	No	No
Gypsum ceiling board	W1101	None detected	Previously sampled Cape Environmental 1993	Above ceiling panels in rooms 1-4 (no joint compound observed)	3,500 sq. ft.	No	No
Smooth plaster	7881	None detected	Room 4, northwest	Classrooms 1-4, boy's and girl's restrooms	7,600 sq. ft.	No	No
Smooth plaster	7882	None detected	Room 2, northeast	Classrooms 1-4, boy's and girl's restrooms	7,600 sq. ft.	No	No
Smooth plaster	7883	None detected	Room 1, south center	Classrooms 1-4, boy's and girl's restrooms	7,600 sq. ft.	No	No

MATERIAL INVENTORY
ASBESTOS

CLIENT: Santa Monica-Malibu Unified School District
PROJECT NO: 107-0008
PROJECT NAME: Webster Elementary School - 3602 Winter Canyon Road, Malibu, California

Building H

MATERIAL	SAMPLE NUMBER	ASBESTOS CONTENT	SAMPLE LOCATION	MATERIAL LOCATION	APPROX. QTY.	FRIABLE	DAMAGE
Smooth plaster	7884	None detected	Boy's restrooms, northeast	Classrooms 1-4, boy's and girl's restrooms	7,600 sq. ft.	No	No
Smooth plaster	7885	None detected	Girl's restrooms, southwest	Classrooms 1-4, boy's and girl's restrooms	7,600 sq. ft.	No	No
Smooth plaster	7886	None detected	Room 3, south center	Classrooms 1-4, boy's and girl's restrooms	7,600 sq. ft.	No	No
Smooth plaster	7887	None detected	Room 3, northwest	Classrooms 1-4, boy's and girl's restrooms	7,600 sq. ft.	No	No
Brown floor tile and mastic	7888	7% Chrysotile (tile) 2% Chrysotile (mastic)	Room 4, center	Rooms 1-4 under carpet	2,800 sq. ft.	No	No
12"x12" light green floor tile and glue	Same as #7999	None detected	Building A	Rooms 1-4	1,000 sq. ft.	No	No
4 inch dark green cove base and glue	Same as #7800	None detected	Building A	Rooms 1-4 carpet area	280 ln. ft.	No	No
4 inch gray cove base and glue	Same as #7802	None detected	Building A	Room 1-4 tiled area	120 ln. ft.	No	No
HVAC duct tape	Same as #7804	None detected	Building A	Rooms 1-4 heater closets	4 each	No	No
Carpet glue	Same as #7854	None detected	Building E	Rooms 1-4	2,700 sq. ft.	No	No
Carpet glue	Same as #7798	None detected	Building A	Rooms 1-4	900 sq. ft.	No	No
Heater unit	NA	Assumed	Not sampled to avoid damage	Heater rooms in rooms 1-4	4 each	No	No
Gravel roof core	NA	Assumed	Not sampled to avoid damage	Roof	5,200 sq. ft.	No	No
Roof mastic	NA	Assumed	Not sampled to avoid damage	Roof penetrations	40 ln. ft.	No	No
Chalkboard (dry erase)	NA	Assumed	Not sampled to avoid damage	Rooms 1-4	8 each	No	No
Sink undercoating	W2801-W2803	10%-15% Chrysotile	Previously sampled Cape Environmental 1993	Rooms 1-4	4 each	No	No

MATERIAL INVENTORY
ASBESTOS

CLIENT: Santa Monica-Malibu Unified School District
PROJECT NO: 107-0008
PROJECT NAME: Webster Elementary School - 3602 Winter Canyon Road, Malibu, California

Portables 21, 22, 23

MATERIAL	SAMPLE NUMBER	ASBESTOS CONTENT	SAMPLE LOCATION	MATERIAL LOCATION	APPROX. QTY.	FRIABLE	DAMAGE
Drywall	7931	None detected	Portable 23, northeast	Portables 21, 22, 23 behind fiberboards	3,600 sq. ft.	No	No
2'x4' fissured ceiling panel	7932	None detected	Portable 21, center	Portable 21	900 sq. ft.	Yes	No
4 inch dark blue cove base and glue	7933	None detected	Portable 23, southwest	Portables 21, 22, 23	240 ln. ft.	No	No
Carpet glue	7934	None detected	Portable 23, southwest	Portables 21, 22, 23	3,400 sq. ft.	No	No
12"x12" light blue speckled floor tile	7935	None detected	Portable 22, southwest	Portable 22 at southwest and southeast sides	30 sq. ft.	No	No

Note: Portables 22 and 23, 2'x4' ceiling panels consist of fiber glass. Exterior walls consist of wood, roof consists of metal sheeting

MATERIAL INVENTORY
ASBESTOS

CLIENT: Santa Monica-Malibu Unified School District
PROJECT NO: 107-0008
PROJECT NAME: Webster Elementary School - 3602 Winter Canyon Road, Malibu, California

Walkways

MATERIAL	SAMPLE NUMBER	ASBESTOS CONTENT	SAMPLE LOCATION	MATERIAL LOCATION	APPROX. QTY.	FRIABLE	DAMAGE
Walkway stucco ceiling	W2501	None Detected	Previously sampled Cape Environmental 1993	All walkways	4,800 sq. ft.	No	No
Walkway stucco ceiling	W2502	None Detected	Previously sampled Cape Environmental 1993	All walkways	4,800 sq. ft.	No	No
Walkway stucco ceiling	W2503	None Detected	Previously sampled Cape Environmental 1993	All walkways	4,800 sq. ft.	No	No
Walkway stucco ceiling	W2504	None Detected	Previously sampled Cape Environmental 1993	All walkways	4,800 sq. ft.	No	No
Walkway stucco ceiling	W2505	None Detected	Previously sampled Cape Environmental 1993	All walkways	4,800 sq. ft.	No	No
Gravel roof core	NA	Assumed	Not sampled to avoid damage	Walk way roof	5,000 sq. ft.	No	No
Roof mastic	NA	Assumed	Not sampled to avoid damage	Walk way roof electrical conduit supports	200 sq. ft.	No	No

APPENDIX B

LABORATORY ANALYSIS REPORT

AmeriSci Los Angeles
24416 SOUTH MAIN STREET • SUITE 308
CARSON, CA 90745
TEL: (310) 834-4868 • FAX: (310) 834-4772

March 8, 2007

CTL Environmental Services
Attn: Cesar Ruvalcaba
24404 S. Vermont Ave.
Suite 307
Harbor City, CA 90710

RE: CTL Environmental Services
Job Number 907031027
P.O. # 30918
107-0008; Webster E.S; SMMUSD

Dear Cesar Ruvalcaba:

Enclosed are the results for polarized light microscopy analysis (PLM) of the following CTL Environmental Services samples received at AmeriSci on Thursday, March 01, 2007, for a 5 day turnaround:

Sample ID 7785 through 7935

The 151 samples contained in Ziplock Bags were shipped to AmeriSci via Hand delivery. These samples were prepared and analyzed according to the EPA Interim Method (EPA 600/M4-82-020 per 40 CFR 763, subpt F, App. A). The samples were evaluated for homogeneity by low power stereomicroscopy. Asbestos fibers were identified by PLM and dispersion staining through the determination of the required optical properties including: morphology, color, pleochroism, refractive indices, birefringence, extinction and sign of elongation. The required analytical information, analysis results, analyst signature and laboratory identification is contained in the Analyst's Report.

This report relates ONLY to the sample analysis expressed as percent asbestos. AmeriSci assumes no responsibility for customer supplied data such as "sample type", "location", or "area sampled". This report must not be used to claim product endorsement by AmeriSci, NVLAP or any agency of the U. S. Government. The National Institute of Standards and Technology Accreditation requirements mandate that this report must not be reproduced, except in full without the written approval of the laboratory. This report may contain specific data not covered by NVLAP or ELAP accreditations respectively, if so identified in relevant footnotes.

AmeriSci appreciates this opportunity to serve your organization. Please contact us for any further assistance or with any questions.

Sincerely,

Mary S. David
Client Services Manager

AmeriSci Los Angeles
24416 S. Main Street, Ste 308
Carson, California 90745
TEL: (310) 834-4868 • FAX: (310) 834-4772

PLM Bulk Asbestos Report

CTL Environmental Services
Attn: Cesar Ruvalcaba
24404 S. Vermont Ave.
Suite 307
Harbor City, CA 90710

Date Received 03/01/07
Date Examined 03/08/07

AmeriSci Job No. 907031027
P.O. # 30918

RE 107-0008; Webster E.S; SMMUSD

Client No. / HGA	Lab No.	Asbestos Present	Total % Asbestos
7785 1	907031027-01 **Location:** Stucco	***Yes***	Trace (<1 %) (by CVES) by Raymundo Orozco on 03/08/07
Description: Beige/Grey, Heterogeneous, Non-Fibrous, Cementitious, Bulk Material **Asbestos Types:** Chrysotile <1. % **Other Material:** Non-fibrous 100 %			
7786 1	907031027-02 **Location:** Stucco	***No***	NAD (by CVES) by Raymundo Orozco on 03/08/07
Description: Grey, Heterogeneous, Non-Fibrous, Cementitious, Bulk Material **Asbestos Types:** **Other Material:** Non-fibrous 100 %			
7787 1	907031027-03 **Location:** Stucco	***No***	NAD (by CVES) by Raymundo Orozco on 03/08/07
Description: Beige/Grey, Heterogeneous, Non-Fibrous, Cementitious, Bulk Material **Asbestos Types:** **Other Material:** Non-fibrous 100 %			
7788 1	907031027-04 **Location:** Stucco	***No***	NAD (by CVES) by Raymundo Orozco on 03/08/07
Description: Grey, Heterogeneous, Non-Fibrous, Cementitious, Bulk Material **Asbestos Types:** **Other Material:** Non-fibrous 100 %			
7789 2	907031027-05 **Location:** Plaster	***No***	NAD (by CVES) by Raymundo Orozco on 03/08/07
Description: Beige, Heterogeneous, Non-Fibrous, Cementitious, Bulk Material **Asbestos Types:** **Other Material:** Non-fibrous 100 %			

See Reporting notes on last page

PLM Bulk Asbestos Report

107-0008; Webster E.S; SMMUSD

Client No. / HGA	Lab No.	Asbestos Present	Total % Asbestos
7790 2	907031027-06 **Location:** Plaster	***No***	NAD (by CVES) by Raymundo Orozco on 03/08/07
Description: Beige, Heterogeneous, Non-Fibrous, Cementitious, Bulk Material **Asbestos Types:** **Other Material:** Non-fibrous 100 %			
791 2	907031027-07 **Location:** Plaster	***No***	NAD (by CVES) by Raymundo Orozco on 03/08/07
Description: Beige, Heterogeneous, Non-Fibrous, Cementitious, Bulk Material **Asbestos Types:** **Other Material:** Non-fibrous 100 %			
7792 2	907031027-08 **Location:** Plaster	***No***	NAD (by CVES) by Raymundo Orozco on 03/08/07
Description: Beige, Heterogeneous, Non-Fibrous, Cementitious, Bulk Material **Asbestos Types:** **Other Material:** Non-fibrous 100 %			
7793 2	907031027-09 **Location:** Plaster	***No***	NAD (by CVES) by Raymundo Orozco on 03/08/07
Description: Beige, Heterogeneous, Non-Fibrous, Cementitious, Bulk Material **Asbestos Types:** **Other Material:** Non-fibrous 100 %			
7794	907031027-10 **Location:** Drywall	***No***	NAD (by CVES) by Raymundo Orozco on 03/08/07
Description: Beige/Brown, Heterogeneous, Fibrous, Bulk Material **Asbestos Types:** **Other Material:** Cellulose 15 %, Non-fibrous 85 %			
7795 3	907031027-11 **Location:** Drywall Joint Comp.	***No***	NAD (by CVES) by Raymundo Orozco on 03/08/07
Description: Beige, Homogeneous, Non-Fibrous, Bulk Material **Asbestos Types:** **Other Material:** Non-fibrous 100 %			

See Reporting notes on last page

PLM Bulk Asbestos Report

107-0008; Webster E.S; SMMUSD

Client No. / HGA	Lab No.	Asbestos Present	Total % Asbestos
7796 3	907031027-12 **Location:** Drywall Joint Comp. **Description:** Beige, Homogeneous, Non-Fibrous, Bulk Material **Asbestos Types:** **Other Material:** Non-fibrous 100 %	***No***	NAD (by CVES) by Raymundo Orozco on 03/08/07
7797 3	907031027-13 **Location:** Drywall Joint Comp. **Description:** Beige, Heterogeneous, Fibrous, Bulk Material **Asbestos Types:** **Other Material:** Cellulose 10 %, Non-fibrous 90 %	***No***	NAD (by CVES) by Raymundo Orozco on 03/08/07
7798	907031027-14 **Location:** Carpet Glue **Description:** Cream, Heterogeneous, Fibrous, Bulk Material **Asbestos Types:** **Other Material:** Synthetic fibers 10 %, Non-fibrous 90 %	***No***	NAD (by CVES) by Raymundo Orozco on 03/08/07
7799	907031027-15L1 **Location:** 12X12 Light Green Speckled Flr Tile & Glue **Description:** Grey, Homogeneous, Non-Fibrous, Floor Tile **Asbestos Types:** **Other Material:** Non-fibrous 100 %	***No***	NAD (by CVES) by Raymundo Orozco on 03/08/07
7799	907031027-15L2 **Location:** 12X12 Light Green Speckled Flr Tile & Glue **Description:** Yellow, Homogeneous, Non-Fibrous, Mastic **Asbestos Types:** **Other Material:** Cellulose 3 %, Non-fibrous 97 %	***No***	NAD (by CVES) by Raymundo Orozco on 03/08/07
7800	907031027-16L1 **Location:** 4in Dark Green Covebase & Glue **Description:** Blue, Homogeneous, Non-Fibrous, Cove Base **Asbestos Types:** **Other Material:** Non-fibrous 100 %	***No***	NAD (by CVES) by Raymundo Orozco on 03/08/07

See Reporting notes on last page

PLM Bulk Asbestos Report

107-0008; Webster E.S; SMMUSD

Client No. / HGA	Lab No.	Asbestos Present	Total % Asbestos
7800	907031027-16.2	*No*	NAD (by CVES) by Raymundo Orozco on 03/08/07
Location: 4in Dark Green Covebase & Glue			
Description: Cream, Homogeneous, Non-Fibrous, Mastic			
Asbestos Types:			
Other Material: Non-fibrous 100 %			
7801	907031027-17L1	*No*	NAD (by CVES) by Raymundo Orozco on 03/08/07
Location: 4in Brown Cove Base & Glue			
Description: Black, Homogeneous, Non-Fibrous, Cove Base			
Asbestos Types:			
Other Material: Non-fibrous 100 %			
7801	907031027-17L2	*No*	NAD (by CVES) by Raymundo Orozco on 03/08/07
Location: 4in Brown Cove Base & Glue			
Description: Cream, Homogeneous, Non-Fibrous, Mastic			
Asbestos Types:			
Other Material: Non-fibrous 100 %			
7802	907031027-18L1	*No*	NAD (by CVES) by Raymundo Orozco on 03/08/07
Location: 4in Gray Cove Bae & Glue			
Description: Grey, Homogeneous, Non-Fibrous, Cove Base			
Asbestos Types:			
Other Material: Non-fibrous 100 %			
7802	907031027-18L2	*No*	NAD (by CVES) by Raymundo Orozco on 03/08/07
Location: 4in Gray Cove Bae & Glue			
Description: Cream, Homogeneous, Non-Fibrous, Mastic			
Asbestos Types:			
Other Material: Non-fibrous 100 %			
7803	907031027-19	*No*	NAD (by CVES) by Raymundo Orozco on 03/08/07
Location: 2X4 Fissured Ceiling Panel			
Description: Grey, Heterogeneous, Fibrous, Bulk Material			
Asbestos Types:			
Other Material: Cellulose 75 %, Fibrous glass 5 %, Non-fibrous 20 %			

See Reporting notes on last page

PLM Bulk Asbestos Report

107-0008; Webster E.S; SMMUSD

Client No. / HGA	Lab No.	Asbestos Present	Total % Asbestos
7804	907031027-20 **Location:** HVAC Duct Tape Gray **Description:** Grey, Homogeneous, Non-Fibrous, Bulk Material **Asbestos Types:** **Other Material:** Non-fibrous 100 %	***No***	NAD (by CVES) by Raymundo Orozco on 03/08/07
7805	907031027-21 **Location:** Window Putty **Description:** Grey, Homogeneous, Non-Fibrous, Bulk Material **Asbestos Types:** **Other Material:** Non-fibrous 100 %	***No***	NAD (by CVES) by Raymundo Orozco on 03/08/07
7830	907031027-22 **Location:** Drywall **Description:** Beige/Brown, Heterogeneous, Fibrous, Bulk Material **Asbestos Types:** **Other Material:** Cellulose 15 %, Non-fibrous 85 %	***No***	NAD (by CVES) by Raymundo Orozco on 03/08/07
7831 4	907031027-23 **Location:** Drywall Joint Compound **Description:** Beige, Homogeneous, Non-Fibrous, Bulk Material **Asbestos Types:** **Other Material:** Non-fibrous 100 %	***No***	NAD (by CVES) by Raymundo Orozco on 03/08/07
7832 4	907031027-24 **Location:** Drywall Joint Compound **Description:** Beige, Heterogeneous, Fibrous, Bulk Material **Asbestos Types:** **Other Material:** Cellulose 10 %, Non-fibrous 90 %	***No***	NAD (by CVES) by Raymundo Orozco on 03/08/07
7833 4	907031027-25 **Location:** Drywall Joint Compound **Description:** Beige, Homogeneous, Non-Fibrous, Bulk Material **Asbestos Types:** **Other Material:** Non-fibrous 100 %	***No***	NAD (by CVES) by Raymundo Orozco on 03/08/07

See Reporting notes on last page

PLM Bulk Asbestos Report

107-0008; Webster E.S; SMMUSD

Client No. / HGA	Lab No.	Asbestos Present	Total % Asbestos
7834	907031027-26	*No*	NAD (by CVES) by Raymundo Orozco on 03/08/07
Location: Drywall			
Description: Beige, Heterogeneous, Fibrous, Bulk Material			
Asbestos Types:			
Other Material: Cellulose 10 %, Non-fibrous 90 %			
7835 5	907031027-27	*No*	NAD (by CVES) by Raymundo Orozco on 03/08/07
Location: Drywall Joint Compound			
Description: Beige, Homogeneous, Non-Fibrous, Bulk Material			
Asbestos Types:			
Other Material: Cellulose 5 %, Non-fibrous 95 %			
7836 5	907031027-28.1	*No*	NAD (by CVES) by Raymundo Orozco on 03/08/07
Location: Drywall Joint Compound			
Description: Beige/Brown, Heterogeneous, Fibrous, Drywall			
Asbestos Types:			
Other Material: Cellulose 15 %, Non-fibrous 85 %			
7836 5	907031027-28.2	*No*	NAD (by CVES) by Raymundo Orozco on 03/08/07
Location: Drywall Joint Compound			
Description: Beige, Heterogeneous, Fibrous, Bulk Material			
Asbestos Types:			
Other Material: Cellulose 5 %, Non-fibrous 95 %			
7837 5	907031027-29	*Yes*	3 % (by CVES) by Raymundo Orozco on 03/08/07
Location: Drywall Joint Compound			
Description: Beige, Homogeneous, Non-Fibrous, Bulk Material			
Asbestos Types: Chrysotile 3.0 %			
Other Material: Non-fibrous 97 %			
7822 6	907031027-30	*No*	NAD (by CVES) by Raymundo Orozco on 03/08/07
Location: Stucco			
Description: Grey, Heterogeneous, Non-Fibrous, Cementitious, Bulk Material			
Asbestos Types:			
Other Material: Non-fibrous 100 %			

See Reporting notes on last page

PLM Bulk Asbestos Report

107-0008; Webster E.S; SMMUSD

Client No. / HGA	Lab No.	Asbestos Present	Total % Asbestos
7823 6	907031027-31 **Location:** Stucco	***No***	NAD (by CVES) by Raymundo Orozco on 03/08/07
Description: Grey, Heterogeneous, Non-Fibrous, Cementitious, Bulk Material **Asbestos Types:** **Other Material:** Non-fibrous 100 %			
7824 6	907031027-32 **Location:** Stucco	***No***	NAD (by CVES) by Raymundo Orozco on 03/08/07
Description: Grey, Heterogeneous, Non-Fibrous, Cementitious, Bulk Material **Asbestos Types:** **Other Material:** Non-fibrous 100 %			
7825 6	907031027-33 **Location:** Stucco	***No***	NAD (by CVES) by Raymundo Orozco on 03/08/07
Description: Grey, Heterogeneous, Non-Fibrous, Cementitious, Bulk Material **Asbestos Types:** **Other Material:** Non-fibrous 100 %			
7826 7	907031027-34 **Location:** Drywall Joint Compound	***No***	NAD (by CVES) by Raymundo Orozco on 03/08/07
Description: Beige, Homogeneous, Non-Fibrous, Bulk Material **Asbestos Types:** **Other Material:** Non-fibrous 100 %			
7827 7	907031027-35 **Location:** Drywall Joint Compound	***Yes***	3 % (by CVES) by Raymundo Orozco on 03/08/07
Description: Beige, Homogeneous, Non-Fibrous, Bulk Material **Asbestos Types:** Chrysotile 3.0 % **Other Material:** Non-fibrous 97 %			
7828 7	907031027-36 **Location:** Drywall Joint Compound	***No***	NAD (by CVES) by Raymundo Orozco on 03/08/07
Description: Beige, Heterogeneous, Fibrous, Bulk Material **Asbestos Types:** **Other Material:** Cellulose 10 %, Non-fibrous 90 %			

See Reporting notes on last page

PLM Bulk Asbestos Report

107-0008; Webster E.S; SMMUSD

Client No. / HGA	Lab No.	Asbestos Present	Total % Asbestos
7829	907031027-37	*No*	NAD (by CVES) by Raymundo Orozco on 03/08/07
Location: Window Putty			
Description: Grey, Homogeneous, Non-Fibrous, Bulk Material			
Asbestos Types:			
Other Material: Non-fibrous 100 %			
7806 8	907031027-38	*No*	NAD (by CVES) by Raymundo Orozco on 03/08/07
Location: Stucco			
Description: Beige, Heterogeneous, Non-Fibrous, Cementitious, Bulk Material			
Asbestos Types:			
Other Material: Non-fibrous 100 %			
7807 8	907031027-39	*No*	NAD (by CVES) by Raymundo Orozco on 03/08/07
Location: Stucco			
Description: Grey, Heterogeneous, Non-Fibrous, Cementitious, Bulk Material			
Asbestos Types:			
Other Material: Non-fibrous 100 %			
7808 8	907031027-40	*No*	NAD (by CVES) by Raymundo Orozco on 03/08/07
Location: Stucco			
Description: Grey, Heterogeneous, Non-Fibrous, Cementitious, Bulk Material			
Asbestos Types:			
Other Material: Non-fibrous 100 %			
7809 8	907031027-41	*No*	NAD (by CVES) by Raymundo Orozco on 03/08/07
Location: Stucco			
Description: Grey, Heterogeneous, Non-Fibrous, Cementitious, Bulk Material			
Asbestos Types:			
Other Material: Non-fibrous 100 %			
7810	907031027-42	*Yes*	Trace (<1 %) (by CVES) by Raymundo Orozco on 03/08/07
Location: Window Putty			
Description: Grey, Homogeneous, Non-Fibrous, Bulk Material			
Asbestos Types: Chrysotile <1. %			
Other Material: Non-fibrous 100 %			

See Reporting notes on last page

PLM Bulk Asbestos Report

107-0008; Webster E.S; SMMUSD

Client No. / HGA	Lab No.	Asbestos Present	Total % Asbestos
7811	907031027-43	*No*	NAD (by CVES) by Raymundo Orozco on 03/08/07
Location: 12" Randam Pinhole Ceiling Tile Glue			
Description: Beige/Brown, Heterogeneous, Fibrous, Bulk Material			
Asbestos Types:			
Other Material: Cellulose 10 %, Fibrous Talc 3 %, Non-fibrous 87 %			
7812	907031027-44	*No*	NAD (by CVES) by Raymundo Orozco on 03/08/07
9 **Location:** Rough Plaster			
Description: Grey, Heterogeneous, Non-Fibrous, Cementitious, Bulk Material			
Asbestos Types:			
Other Material: Non-fibrous 100 %			
7813	907031027-45	*No*	NAD (by CVES) by Raymundo Orozco on 03/08/07
9 **Location:** Rough Plaster			
Description: Grey, Heterogeneous, Non-Fibrous, Cementitious, Bulk Material			
Asbestos Types:			
Other Material: Non-fibrous 100 %			
7814	907031027-46	*No*	NAD (by CVES) by Raymundo Orozco on 03/08/07
9 **Location:** Rough Plaster			
Description: Grey, Heterogeneous, Non-Fibrous, Cementitious, Bulk Material			
Asbestos Types:			
Other Material: Non-fibrous 100 %			
7815	907031027-47	*Yes*	2 % (by CVES) by Raymundo Orozco on 03/08/07
10 **Location:** Drywall Joint Compound			
Description: Beige, Homogeneous, Non-Fibrous, Bulk Material			
Asbestos Types: Chrysotile 2.0 %			
Other Material: Non-fibrous 98 %			
7816	907031027-48		NA/PS
10 **Location:** Drywall Joint Compound			
Description: Bulk Material			
Asbestos Types:			
Other Material:			

See Reporting notes on last page

PLM Bulk Asbestos Report

107-0008; Webster E.S; SMMUSD

Client No. / HGA	Lab No.	Asbestos Present	Total % Asbestos
7817 10	907031027-49 **Location:** Drywall Joint Compound **Description:** Bulk Material **Asbestos Types:** **Other Material:**		NA/PS
7818	907031027-50 **Location:** Drywall **Description:** Beige, Heterogeneous, Fibrous, Bulk Material **Asbestos Types:** **Other Material:** Cellulose 10 %, Non-fibrous 90 %	***No***	NAD (by CVES) by Raymundo Orozco on 03/08/07
7819 11	907031027-51 **Location:** Drywall Joint Compound **Description:** Beige, Homogeneous, Non-Fibrous, Bulk Material **Asbestos Types:** Chrysotile 2.0 % **Other Material:** Non-fibrous 98 %	***Yes***	2 % (by CVES) by Raymundo Orozco on 03/08/07
7820 11	907031027-52 **Location:** Drywall Joint Compound **Description:** Bulk Material **Asbestos Types:** **Other Material:**		NA/PS
7821 11	907031027-53 **Location:** Drywall Joint Compound **Description:** Bulk Material **Asbestos Types:** **Other Material:**		NA/PS
7889 12	907031027-54 **Location:** Stucco **Description:** Grey, Heterogeneous, Non-Fibrous, Cementitious, Bulk Material **Asbestos Types:** **Other Material:** Non-fibrous 100 %	***No***	NAD (by CVES) by Raymundo Orozco on 03/08/07

See Reporting notes on last page

PLM Bulk Asbestos Report

107-0008; Webster E.S; SMMUSD

Client No. / HGA	Lab No.	Asbestos Present	Total % Asbestos
7890 12	907031027-55 **Location:** Stucco	***No***	NAD (by CVES) by Raymundo Orozco on 03/08/07
Description: Grey, Heterogeneous, Non-Fibrous, Cementitious, Bulk Material **Asbestos Types:** **Other Material:** Non-fibrous 100 %			
7891 12	907031027-56 **Location:** Stucco	***No***	NAD (by CVES) by Raymundo Orozco on 03/08/07
Description: Grey, Heterogeneous, Non-Fibrous, Cementitious, Bulk Material **Asbestos Types:** **Other Material:** Non-fibrous 100 %			
7892 12	907031027-57 **Location:** Stucco	***No***	NAD (by CVES) by Raymundo Orozco on 03/08/07
Description: Grey, Heterogeneous, Non-Fibrous, Cementitious, Bulk Material **Asbestos Types:** **Other Material:** Non-fibrous 100 %			
7893 12	907031027-58 **Location:** Stucco	***No***	NAD (by CVES) by Raymundo Orozco on 03/08/07
Description: Grey, Heterogeneous, Non-Fibrous, Cementitious, Bulk Material **Asbestos Types:** **Other Material:** Non-fibrous 100 %			
7894 13	907031027-59 **Location:** Rough Plaster Ceiling	***No***	NAD (by CVES) by Raymundo Orozco on 03/08/07
Description: Beige, Heterogeneous, Non-Fibrous, Cementitious, Bulk Material **Asbestos Types:** **Other Material:** Non-fibrous 100 %			
7895 13	907031027-60 **Location:** Rough Plaster Ceiling	***No***	NAD (by CVES) by Raymundo Orozco on 03/08/07
Description: Beige, Heterogeneous, Non-Fibrous, Cementitious, Bulk Material **Asbestos Types:** **Other Material:** Non-fibrous 100 %			

See Reporting notes on last page

PLM Bulk Asbestos Report

107-0008; Webster E.S; SMMUSD

Client No. / HGA	Lab No.	Asbestos Present	Total % Asbestos
7896 13	907031027-61 **Location:** Rough Plaster Ceiling	***No***	NAD (by CVES) by Raymundo Orozco on 03/08/07
Description: Beige, Heterogeneous, Non-Fibrous, Cementitious, Bulk Material **Asbestos Types:** **Other Material:** Non-fibrous 100 %			
7897	907031027-62L1 **Location:** 4in Brown Cove Base & Glue	***No***	NAD (by CVES) by Raymundo Orozco on 03/08/07
Description: Beige, Homogeneous, Non-Fibrous, Cove Base **Asbestos Types:** **Other Material:** Non-fibrous 100 %			
7897	907031027-62L2 **Location:** 4in Brown Cove Base & Glue	***No***	NAD (by CVES) by Raymundo Orozco on 03/08/07
Description: Brown, Homogeneous, Non-Fibrous, Mastic **Asbestos Types:** **Other Material:** Fibrous Talc 5 %, Non-fibrous 95 %			
7898	907031027-63 **Location:** Window Putty	***Yes***	2 % (by CVES) by Raymundo Orozco on 03/08/07
Description: Beige, Homogeneous, Non-Fibrous, Bulk Material **Asbestos Types:** Chrysotile 2.0 % **Other Material:** Non-fibrous 98 %			
7899	907031027-64 **Location:** Drywall	***No***	NAD (by CVES) by Raymundo Orozco on 03/08/07
Description: Beige, Heterogeneous, Fibrous, Bulk Material **Asbestos Types:** **Other Material:** Cellulose 3 %, Non-fibrous 97 %			
7900 14	907031027-65 **Location:** Drywall Joint Compound	***No***	NAD (by CVES) by Raymundo Orozco on 03/08/07
Description: Beige, Heterogeneous, Fibrous, Bulk Material **Asbestos Types:** **Other Material:** Cellulose 3 %, Non-fibrous 97 %			

See Reporting notes on last page

PLM Bulk Asbestos Report

107-0008; Webster E.S; SMMUSD

Client No. / HGA	Lab No.	Asbestos Present	Total % Asbestos
7901 14	907031027-66 **Location:** Drywall Joint Compound **Description:** Beige, Homogeneous, Non-Fibrous, Bulk Material **Asbestos Types:** **Other Material:** Non-fibrous 100 %	***No***	NAD (by CVES) by Raymundo Orozco on 03/08/07
7902 14	907031027-67 **Location:** Drywall Joint Compound **Description:** Beige, Homogeneous, Non-Fibrous, Bulk Material **Asbestos Types:** **Other Material:** Non-fibrous 100 %	***No***	NAD (by CVES) by Raymundo Orozco on 03/08/07
7903 14	907031027-68 **Location:** Drywall Joint Compound **Description:** Beige, Homogeneous, Non-Fibrous, Bulk Material **Asbestos Types:** **Other Material:** Non-fibrous 100 %	***No***	NAD (by CVES) by Raymundo Orozco on 03/08/07
7904 14	907031027-69 **Location:** Drywall Joint Compound **Description:** Beige, Homogeneous, Non-Fibrous, Bulk Material **Asbestos Types:** **Other Material:** Non-fibrous 100 %	***No***	NAD (by CVES) by Raymundo Orozco on 03/08/07
7838 15	907031027-70 **Location:** Stucco **Description:** Grey, Heterogeneous, Non-Fibrous, Cementitious, Bulk Material **Asbestos Types:** **Other Material:** Non-fibrous 100 %	***No***	NAD (by CVES) by Raymundo Orozco on 03/08/07
7839 15	907031027-71 **Location:** Stucco **Description:** Tan, Heterogeneous, Non-Fibrous, Cementitious, Bulk Material **Asbestos Types:** **Other Material:** Non-fibrous 100 %	***No***	NAD (by CVES) by Raymundo Orozco on 03/08/07

See Reporting notes on last page

PLM Bulk Asbestos Report

107-0008; Webster E.S; SMMUSD

Client No. / HGA	Lab No.	Asbestos Present	Total % Asbestos
7840 15	907031027-72 **Location:** Stucco	***No***	NAD (by CVES) by Raymundo Orozco on 03/08/07
Description: Tan, Heterogeneous, Non-Fibrous, Cementitious, Bulk Material **Asbestos Types:** **Other Material:** Non-fibrous 100 %			
7841 15	907031027-73 **Location:** Stucco	***No***	NAD (by CVES) by Raymundo Orozco on 03/08/07
Description: Grey, Heterogeneous, Non-Fibrous, Cementitious, Bulk Material **Asbestos Types:** **Other Material:** Non-fibrous 100 %			
7842 15	907031027-74 **Location:** Stucco	***No***	NAD (by CVES) by Raymundo Orozco on 03/08/07
Description: Tan, Heterogeneous, Non-Fibrous, Cementitious, Bulk Material **Asbestos Types:** **Other Material:** Non-fibrous 100 %			
7843	907031027-75 **Location:** Drywall	***No***	NAD (by CVES) by Raymundo Orozco on 03/08/07
Description: Beige, Heterogeneous, Fibrous, Bulk Material **Asbestos Types:** **Other Material:** Cellulose 10 %, Non-fibrous 90 %			
7844 17	907031027-76 **Location:** Drywall Joint Compound	***No***	NAD (by CVES) by Raymundo Orozco on 03/08/07
Description: Beige, Homogeneous, Non-Fibrous, Bulk Material **Asbestos Types:** **Other Material:** Non-fibrous 100 %			
7845 17	907031027-77 **Location:** Drywall Joint Compound	***No***	NAD (by CVES) by Raymundo Orozco on 03/08/07
Description: Beige, Homogeneous, Non-Fibrous, Bulk Material **Asbestos Types:** **Other Material:** Non-fibrous 100 %			

See Reporting notes on last page

PLM Bulk Asbestos Report

107-0008; Webster E.S; SMMUSD

Client No. / HGA	Lab No.	Asbestos Present	Total % Asbestos
7846 17	907031027-78 **Location:** Drywall Joint Compound **Description:** Beige, Homogeneous, Non-Fibrous, Bulk Material **Asbestos Types:** **Other Material:** Non-fibrous 100 %	***No***	NAD (by CVES) by Raymundo Orozco on 03/08/07
7847 18	907031027-79 **Location:** Rough Plaster Wall **Description:** Beige, Heterogeneous, Non-Fibrous, Cementitious, Bulk Material **Asbestos Types:** **Other Material:** Non-fibrous 100 %	***No***	NAD (by CVES) by Raymundo Orozco on 03/08/07
7848 18	907031027-80 **Location:** Rough Plaster Wall **Description:** Beige, Heterogeneous, Non-Fibrous, Cementitious, Bulk Material **Asbestos Types:** **Other Material:** Non-fibrous 100 %	***No***	NAD (by CVES) by Raymundo Orozco on 03/08/07
7849 18	907031027-81 **Location:** Rough Plaster Wall **Description:** Beige, Heterogeneous, Non-Fibrous, Cementitious, Bulk Material **Asbestos Types:** **Other Material:** Non-fibrous 100 %	***No***	NAD (by CVES) by Raymundo Orozco on 03/08/07
7850 19	907031027-82 **Location:** Smooth Plaster Wall **Description:** Beige, Heterogeneous, Non-Fibrous, Cementitious, Bulk Material **Asbestos Types:** **Other Material:** Non-fibrous 100 %	***No***	NAD (by CVES) by Raymundo Orozco on 03/08/07
7851 19	907031027-83 **Location:** Smooth Plaster Wall **Description:** Beige, Heterogeneous, Non-Fibrous, Cementitious, Bulk Material **Asbestos Types:** **Other Material:** Non-fibrous 100 %	***No***	NAD (by CVES) by Raymundo Orozco on 03/08/07

See Reporting notes on last page

PLM Bulk Asbestos Report

107-0008; Webster E.S; SMMUSD

Client No. / HGA	Lab No.	Asbestos Present	Total % Asbestos
7852 19	907031027-84 **Location:** Smooth Plaster Wall	***No***	NAD (by CVES) by Raymundo Orozco on 03/08/07
Description: Beige, Heterogeneous, Non-Fibrous, Cementitious, Bulk Material **Asbestos Types:** **Other Material:** Non-fibrous 100 %			
7853 19	907031027-85 **Location:** Smooth Plaster Wall	***No***	NAD (by CVES) by Raymundo Orozco on 03/08/07
Description: Beige, Heterogeneous, Non-Fibrous, Cementitious, Bulk Material **Asbestos Types:** **Other Material:** Non-fibrous 100 %			
7854	907031027-86 **Location:** Carpet Glue	***No***	NAD (by CVES) by Raymundo Orozco on 03/08/07
Description: Yellow, Heterogeneous, Fibrous, Bulk Material **Asbestos Types:** **Other Material:** Synthetic fibers 15 %, Non-fibrous 85 %			
7855	907031027-87L1 **Location:** Brown Floor Tile & Mastic	***Yes***	5 % (by CVES) by Raymundo Orozco on 03/08/07
Description: Brown, Homogeneous, Non-Fibrous, Floor Tile **Asbestos Types:** Chrysotile 5.0 % **Other Material:** Non-fibrous 95 %			
7855	907031027-87L2 **Location:** Brown Floor Tile & Mastic	***Yes***	2 % (by CVES) by Raymundo Orozco on 03/08/07
Description: Black, Homogeneous, Non-Fibrous, Mastic **Asbestos Types:** Chrysotile 2.0 % **Other Material:** Non-fibrous 98 %			
7856	907031027-88L1 **Location:** 12X12 Gray Speckled Flr. Tile	***No***	NAD (by CVES) by Raymundo Orozco on 03/08/07
Description: Grey, Homogeneous, Non-Fibrous, Floor Tile **Asbestos Types:** **Other Material:** Non-fibrous 100 %			

See Reporting notes on last page

PLM Bulk Asbestos Report

107-0008; Webster E.S; SMMUSD

Client No. / HGA	Lab No.	Asbestos Present	Total % Asbestos
7857 20	907031027-89 **Location:** Stucco	***No***	NAD (by CVES) by Raymundo Orozco on 03/08/07
Description: Grey, Heterogeneous, Non-Fibrous, Cementitious, Bulk Material **Asbestos Types:** **Other Material:** Non-fibrous 100 %			
7858 20	907031027-90 **Location:** Stucco	***No***	NAD (by CVES) by Raymundo Orozco on 03/08/07
Description: Grey, Heterogeneous, Non-Fibrous, Cementitious, Bulk Material **Asbestos Types:** **Other Material:** Non-fibrous 100 %			
7859 20	907031027-91 **Location:** Stucco	***No***	NAD (by CVES) by Raymundo Orozco on 03/08/07
Description: Grey, Heterogeneous, Non-Fibrous, Cementitious, Bulk Material **Asbestos Types:** **Other Material:** Non-fibrous 100 %			
7860 20	907031027-92 **Location:** Stucco	***No***	NAD (by CVES) by Raymundo Orozco on 03/08/07
Description: Grey, Heterogeneous, Non-Fibrous, Cementitious, Bulk Material **Asbestos Types:** **Other Material:** Non-fibrous 100 %			
7861 20	907031027-93 **Location:** Stucco	***No***	NAD (by CVES) by Raymundo Orozco on 03/08/07
Description: Grey, Heterogeneous, Non-Fibrous, Cementitious, Bulk Material **Asbestos Types:** **Other Material:** Non-fibrous 100 %			
7866 21	907031027-94 **Location:** Rough Plaster Walls	***No***	NAD (by CVES) by Raymundo Orozco on 03/08/07
Description: Beige, Heterogeneous, Non-Fibrous, Cementitious, Bulk Material **Asbestos Types:** **Other Material:** Non-fibrous 100 %			

See Reporting notes on last page

PLM Bulk Asbestos Report

107-0008; Webster E.S; SMMUSD

Client No. / HGA	Lab No.	Asbestos Present	Total % Asbestos
7867 21	907031027-95 **Location:** Rough Plaster Walls **Description:** Beige, Heterogeneous, Non-Fibrous, Cementitious, Bulk Material **Asbestos Types:** **Other Material:** Non-fibrous 100 %	***No***	NAD (by CVES) by Raymundo Orozco on 03/08/07
7862 22	907031027-96 **Location:** Smooth Plaster Ceiling **Description:** Beige, Heterogeneous, Non-Fibrous, Cementitious, Bulk Material **Asbestos Types:** **Other Material:** Non-fibrous 100 %	***No***	NAD (by CVES) by Raymundo Orozco on 03/08/07
7863 22	907031027-97 **Location:** Smooth Plaster Ceiling **Description:** Beige, Heterogeneous, Non-Fibrous, Cementitious, Bulk Material **Asbestos Types:** **Other Material:** Non-fibrous 100 %	***No***	NAD (by CVES) by Raymundo Orozco on 03/08/07
7864 23	907031027-98 **Location:** Smooth Plaster Wall **Description:** Beige, Heterogeneous, Non-Fibrous, Cementitious, Bulk Material **Asbestos Types:** **Other Material:** Non-fibrous 100 %	***No***	NAD (by CVES) by Raymundo Orozco on 03/08/07
7865 23	907031027-99 **Location:** Smooth Plaster Wall **Description:** Beige, Heterogeneous, Non-Fibrous, Cementitious, Bulk Material **Asbestos Types:** **Other Material:** Non-fibrous 100 %	***No***	NAD (by CVES) by Raymundo Orozco on 03/08/07
7868	907031027-100L1 **Location:** Brown Floor Tile & Mastic **Description:** Brown, Homogeneous, Non-Fibrous, Floor Tile **Asbestos Types:** Chrysotile 5.0 % **Other Material:** Non-fibrous 95 %	***Yes***	5 % (by CVES) by Raymundo Orozco on 03/08/07

See Reporting notes on last page

PLM Bulk Asbestos Report

107-0008; Webster E.S; SMMUSD

Client No. / HGA	Lab No.	Asbestos Present	Total % Asbestos
7868	907031027-100L2	*Yes*	5 % (by CVES) by Raymundo Orozco on 03/08/07
Location: Brown Floor Tile & Mastic			
Description: Black, Homogeneous, Non-Fibrous, Mastic			
Asbestos Types: Chrysotile 5.0 %			
Other Material: Non-fibrous 95 %			
7869	907031027-101	*No*	NAD (by CVES) by Raymundo Orozco on 03/08/07
Location: 12" Peghole Ceiling Tile & Glue			
Description: Brown, Heterogeneous, Non-Fibrous, Bulk Material			
Asbestos Types:			
Other Material: Cellulose 10 %, Non-fibrous 90 %			
7870	907031027-102	*No*	NAD (by CVES) by Raymundo Orozco on 03/08/07
Location: Drywall			
Description: Brown/White, Heterogeneous, Fibrous, Bulk Material			
Asbestos Types:			
Other Material: Cellulose 15 %, Non-fibrous 85 %			
7905	907031027-103	*No*	NAD (by CVES) by Raymundo Orozco on 03/08/07
24 **Location:** Stucco			
Description: Grey, Heterogeneous, Non-Fibrous, Cementitious, Bulk Material			
Asbestos Types:			
Other Material: Non-fibrous 100 %			
7906	907031027-104	*No*	NAD (by CVES) by Raymundo Orozco on 03/08/07
24 **Location:** Stucco			
Description: Grey, Heterogeneous, Non-Fibrous, Cementitious, Bulk Material			
Asbestos Types:			
Other Material: Non-fibrous 100 %			
7907	907031027-105	*No*	NAD (by CVES) by Raymundo Orozco on 03/08/07
24 **Location:** Stucco			
Description: Grey, Heterogeneous, Non-Fibrous, Cementitious, Bulk Material			
Asbestos Types:			
Other Material: Non-fibrous 100 %			

See Reporting notes on last page

PLM Bulk Asbestos Report

107-0008; Webster E.S; SMMUSD

Client No. / HGA	Lab No.	Asbestos Present	Total % Asbestos
7908 24	907031027-106 **Location:** Stucco	***No***	NAD (by CVES) by Raymundo Orozco on 03/08/07
Description: Grey, Heterogeneous, Non-Fibrous, Cementitious, Bulk Material **Asbestos Types:** **Other Material:** Non-fibrous 100 %			
7909 24	907031027-107 **Location:** Stucco	***Yes***	Trace (<1 %) (by CVES) by Raymundo Orozco on 03/08/07
Description: Grey, Heterogeneous, Non-Fibrous, Cementitious, Bulk Material **Asbestos Types:** Chrysotile <1. % **Other Material:** Non-fibrous 100 %			
7910	907031027-108 **Location:** Window Putty	***Yes***	Trace (<1 %) (by CVES) by Raymundo Orozco on 03/08/07
Description: Beige, Homogeneous, Non-Fibrous, Bulk Material **Asbestos Types:** Chrysotile <1. % **Other Material:** Non-fibrous 100 %			
7911	907031027-109L1 **Location:** Gray With Black Dots Floor Sheeting	***No***	NAD (by CVES) by Raymundo Orozco on 03/08/07
Description: Grey, Heterogeneous, Fibrous, Linoleum **Asbestos Types:** **Other Material:** Fibrous glass 2 %, Synthetic fibers 3 %, Non-fibrous 95 %			
7911	907031027-109L2 **Location:** Gray With Black Dots Floor Sheeting	***No***	NAD (by CVES) by Raymundo Orozco on 03/08/07
Description: Yellow, Homogeneous, Non-Fibrous, Mastic **Asbestos Types:** **Other Material:** Cellulose 5 %, Non-fibrous 95 %			
7912	907031027-110 **Location:** Rough Plaster Ceiling	***No***	NAD (by CVES) by Raymundo Orozco on 03/08/07
Description: Grey, Heterogeneous, Non-Fibrous, Cementitious, Bulk Material **Asbestos Types:** **Other Material:** Non-fibrous 100 %			

See Reporting notes on last page

PLM Bulk Asbestos Report

107-0008; Webster E.S; SMMUSD

Client No. / HGA	Lab No.	Asbestos Present	Total % Asbestos
7913 25	907031027-111 **Location:** Rough Plaster Walls	***No***	NAD (by CVES) by Raymundo Orozco on 03/08/07
Description: Grey, Heterogeneous, Non-Fibrous, Cementitious, Bulk Material **Asbestos Types:** **Other Material:** Non-fibrous 100 %			
7914 25	907031027-112 **Location:** Rough Plaster Walls	***No***	NAD (by CVES) by Raymundo Orozco on 03/08/07
Description: Grey, Heterogeneous, Non-Fibrous, Cementitious, Bulk Material **Asbestos Types:** **Other Material:** Non-fibrous 100 %			
7915 25	907031027-113 **Location:** Rough Plaster Walls	***No***	NAD (by CVES) by Raymundo Orozco on 03/08/07
Description: Grey, Heterogeneous, Non-Fibrous, Cementitious, Bulk Material **Asbestos Types:** **Other Material:** Non-fibrous 100 %			
7916 25	907031027-114 **Location:** Rough Plaster Walls	***No***	NAD (by CVES) by Raymundo Orozco on 03/08/07
Description: Beige, Heterogeneous, Non-Fibrous, Cementitious, Bulk Material **Asbestos Types:** **Other Material:** Non-fibrous 100 %			
7917 26	907031027-115 **Location:** Smooth Plaster Ceiling	***No***	NAD (by CVES) by Raymundo Orozco on 03/08/07
Description: Beige, Heterogeneous, Non-Fibrous, Cementitious, Bulk Material **Asbestos Types:** **Other Material:** Non-fibrous 100 %			
7918 26	907031027-116 **Location:** Smooth Plaster Ceiling	***No***	NAD (by CVES) by Raymundo Orozco on 03/08/07
Description: Beige, Heterogeneous, Non-Fibrous, Cementitious, Bulk Material **Asbestos Types:** **Other Material:** Non-fibrous 100 %			

See Reporting notes on last page

PLM Bulk Asbestos Report

107-0008; Webster E.S; SMMUSD

Client No. / HGA	Lab No.	Asbestos Present	Total % Asbestos
7919 26	907031027-117 **Location:** Smooth Plaster Ceiling	***No***	NAD (by CVES) by Raymundo Orozco on 03/08/07
Description: Beige, Heterogeneous, Non-Fibrous, Cementitious, Bulk Material **Asbestos Types:** **Other Material:** Non-fibrous 100 %			
7920 27	907031027-118 **Location:** Smooth Plaster Wall	***No***	NAD (by CVES) by Raymundo Orozco on 03/08/07
Description: Beige, Heterogeneous, Non-Fibrous, Cementitious, Bulk Material **Asbestos Types:** **Other Material:** Non-fibrous 100 %			
7921 27	907031027-119 **Location:** Smooth Plaster Wall	***No***	NAD (by CVES) by Raymundo Orozco on 03/08/07
Description: Beige, Heterogeneous, Non-Fibrous, Cementitious, Bulk Material **Asbestos Types:** **Other Material:** Non-fibrous 100 %			
7922 27	907031027-120 **Location:** Smooth Plaster Wall	***No***	NAD (by CVES) by Raymundo Orozco on 03/08/07
Description: Beige, Heterogeneous, Non-Fibrous, Cementitious, Bulk Material **Asbestos Types:** **Other Material:** Non-fibrous 100 %			
7923 27	907031027-121 **Location:** Smooth Plaster Wall	***No***	NAD (by CVES) by Raymundo Orozco on 03/08/07
Description: Beige, Heterogeneous, Non-Fibrous, Cementitious, Bulk Material **Asbestos Types:** **Other Material:** Non-fibrous 100 %			
7924 27	907031027-122 **Location:** Smooth Plaster Wall	***No***	NAD (by CVES) by Raymundo Orozco on 03/08/07
Description: Beige, Heterogeneous, Non-Fibrous, Cementitious, Bulk Material **Asbestos Types:** **Other Material:** Non-fibrous 100 %			

See Reporting notes on last page

PLM Bulk Asbestos Report

107-0008; Webster E.S; SMMUSD

Client No. / HGA	Lab No.	Asbestos Present	Total % Asbestos
7925 27	907031027-123 **Location:** Smooth Plaster Wall	***No***	NAD (by CVES) by Raymundo Orozco on 03/08/07

Description: Beige, Heterogeneous, Non-Fibrous, Cementitious, Bulk Material
Asbestos Types:
Other Material: Non-fibrous 100 %

7926	907031027-124 **Location:** Drywall	***No***	NAD (by CVES) by Raymundo Orozco on 03/08/07

Description: Brown/White, Heterogeneous, Fibrous, Bulk Material
Asbestos Types:
Other Material: Cellulose 15 %, Non-fibrous 85 %

7927	907031027-125L1 **Location:** 4 In Light Green Cove Base & Glue	***No***	NAD (by CVES) by Raymundo Orozco on 03/08/07

Description: Green, Homogeneous, Non-Fibrous, Cove Base
Asbestos Types:
Other Material: Non-fibrous 100 %

7927	907031027-125L2 **Location:** 4 In Light Green Cove Base & Glue	***No***	NAD (by CVES) by Raymundo Orozco on 03/08/07

Description: Cream, Homogeneous, Non-Fibrous, Mastic
Asbestos Types:
Other Material: Non-fibrous 100 %

7928	907031027-126 **Location:** 12X12 Finnish For Tile With Dark Spots	***No***	NAD (by CVES) by Raymundo Orozco on 03/08/07

Description: Grey, Homogeneous, Non-Fibrous, Bulk Material
Asbestos Types:
Other Material: Non-fibrous 100 %

7929	907031027-127 **Location:** Hot Brich	***No***	NAD (by CVES) by Raymundo Orozco on 03/08/07

Description: Beige, Heterogeneous, Non-Fibrous, Bulk Material
Asbestos Types:
Other Material: Non-fibrous 100 %

See Reporting notes on last page

PLM Bulk Asbestos Report

107-0008; Webster E.S; SMMUSD

Client No. / HGA	Lab No.	Asbestos Present	Total % Asbestos
7930	907031027-128L1	*No*	NAD (by CVES) by Raymundo Orozco on 03/08/07
Location: 4 In Brown Cove Base & Glue			
Description: Black, Homogeneous, Non-Fibrous, Cove Base			
Asbestos Types:			
Other Material: Non-fibrous 100 %			
7930	907031027-128L2	*No*	NAD (by CVES) by Raymundo Orozco on 03/08/07
Location: 4 In Brown Cove Base & Glue			
Description: Brown, Heterogeneous, Non-Fibrous, Mastic			
Asbestos Types:			
Other Material: Wollastonite 5 %, Non-fibrous 95 %			
7877	907031027-129.1	*No*	NAD (by CVES) by Raymundo Orozco on 03/08/07
Location: Drywall			
Description: Brown/White, Heterogeneous, Fibrous, Drywall			
Asbestos Types:			
Other Material: Cellulose 15 %, Non-fibrous 85 %			
7877	907031027-129.2	*No*	NAD (by CVES) by Raymundo Orozco on 03/08/07
Location: Drywall			
Description: Beige, Homogeneous, Non-Fibrous, Joint Compound			
Asbestos Types:			
Other Material: Non-fibrous 100 %			
7878	907031027-130	*No*	NAD (by CVES) by Raymundo Orozco on 03/08/07
28 **Location:** Drywall Joint Compound			
Description: Beige, Homogeneous, Non-Fibrous, Bulk Material			
Asbestos Types:			
Other Material: Non-fibrous 100 %			
7879	907031027-131	*No*	NAD (by CVES) by Raymundo Orozco on 03/08/07
28 **Location:** Drywall Joint Compound			
Description: Beige, Homogeneous, Non-Fibrous, Bulk Material			
Asbestos Types:			
Other Material: Non-fibrous 100 %			

See Reporting notes on last page

PLM Bulk Asbestos Report

107-0008; Webster E.S; SMMUSD

Client No. / HGA	Lab No.	Asbestos Present	Total % Asbestos
7880 28	907031027-132 **Location:** Drywall Joint Compound **Description:** Beige, Homogeneous, Non-Fibrous, Bulk Material **Asbestos Types:** **Other Material:** Non-fibrous 100 %	***No***	NAD (by CVES) by Raymundo Orozco on 03/08/07
7881 29	907031027-133 **Location:** Smooth Plaster **Description:** Beige, Heterogeneous, Non-Fibrous, Cementitious, Bulk Material **Asbestos Types:** **Other Material:** Non-fibrous 100 %	***No***	NAD (by CVES) by Raymundo Orozco on 03/08/07
7882 29	907031027-134 **Location:** Smooth Plaster **Description:** Beige, Heterogeneous, Non-Fibrous, Cementitious, Bulk Material **Asbestos Types:** **Other Material:** Non-fibrous 100 %	***No***	NAD (by CVES) by Raymundo Orozco on 03/08/07
7883 29	907031027-135 **Location:** Smooth Plaster **Description:** Beige, Homogeneous, Non-Fibrous, Bulk Material **Asbestos Types:** **Other Material:** Non-fibrous 100 %	***No***	NAD (by CVES) by Raymundo Orozco on 03/08/07
7884 29	907031027-136 **Location:** Smooth Plaster **Description:** Beige, Heterogeneous, Non-Fibrous, Cementitious, Bulk Material **Asbestos Types:** **Other Material:** Non-fibrous 100 %	***No***	NAD (by CVES) by Raymundo Orozco on 03/08/07
7885 29	907031027-137 **Location:** Smooth Plaster **Description:** Beige, Heterogeneous, Non-Fibrous, Cementitious, Bulk Material **Asbestos Types:** **Other Material:** Non-fibrous 100 %	***No***	NAD (by CVES) by Raymundo Orozco on 03/08/07

See Reporting notes on last page

PLM Bulk Asbestos Report

107-0008; Webster E.S; SMMUSD

Client No. / HGA	Lab No.	Asbestos Present	Total % Asbestos
7886 29	907031027-138 **Location:** Smooth Plaster	***No***	NAD (by CVES) by Raymundo Orozco on 03/08/07
Description: Beige, Heterogeneous, Non-Fibrous, Cementitious, Bulk Material **Asbestos Types:** **Other Material:** Non-fibrous 100 %			
7887 29	907031027-139 **Location:** Smooth Plaster	***No***	NAD (by CVES) by Raymundo Orozco on 03/08/07
Description: Beige, Heterogeneous, Non-Fibrous, Cementitious, Bulk Material **Asbestos Types:** **Other Material:** Non-fibrous 100 %			
7888	907031027-140L1 **Location:** Brown Floor Tile & Mastic	***Yes***	7 % (by CVES) by Raymundo Orozco on 03/08/07
Description: Brown, Homogeneous, Non-Fibrous, Floor Tile **Asbestos Types:** Chrysotile 7.0 % **Other Material:** Non-fibrous 93 %			
7888	907031027-140L2 **Location:** Brown Floor Tile & Mastic	***Yes***	2 % (by CVES) by Raymundo Orozco on 03/08/07
Description: Black, Homogeneous, Non-Fibrous, Mastic **Asbestos Types:** Chrysotile 2.0 % **Other Material:** Non-fibrous 98 %			
7871 30	907031027-141 **Location:** Stucco	***No***	NAD (by CVES) by Raymundo Orozco on 03/08/07
Description: Grey, Heterogeneous, Non-Fibrous, Cementitious, Bulk Material **Asbestos Types:** **Other Material:** Non-fibrous 100 %			
7872 30	907031027-142 **Location:** Stucco	***No***	NAD (by CVES) by Raymundo Orozco on 03/08/07
Description: Greeny, Heterogeneous, Non-Fibrous, Cementitious, Bulk Material **Asbestos Types:** **Other Material:** Non-fibrous 100 %			

See Reporting notes on last page

PLM Bulk Asbestos Report

107-0008; Webster E.S; SMMUSD

Client No. / HGA	Lab No.	Asbestos Present	Total % Asbestos
7873 30	907031027-143 **Location:** Stucco	***No***	NAD (by CVES) by Raymundo Orozco on 03/08/07
Description: Beige, Heterogeneous, Non-Fibrous, Cementitious, Bulk Material **Asbestos Types:** **Other Material:** Non-fibrous 100 %			
7874 31	907031027-144 **Location:** Rough Plaster Ceiling	***No***	NAD (by CVES) by Raymundo Orozco on 03/08/07
Description: Beige, Heterogeneous, Non-Fibrous, Cementitious, Bulk Material **Asbestos Types:** **Other Material:** Non-fibrous 100 %			
7875 31	907031027-145 **Location:** Rough Plaster Ceiling	***No***	NAD (by CVES) by Raymundo Orozco on 03/08/07
Description: Beige, Heterogeneous, Non-Fibrous, Cementitious, Bulk Material **Asbestos Types:** **Other Material:** Non-fibrous 100 %			
7876	907031027-146 **Location:** Window Putty	***Yes***	2 % (by CVES) by Raymundo Orozco on 03/08/07
Description: Beige, Homogeneous, Non-Fibrous, Bulk Material **Asbestos Types:** Chrysotile 2.0 % **Other Material:** Non-fibrous 98 %			
7931	907031027-147 **Location:** Drywall	***No***	NAD (by CVES) by Raymundo Orozco on 03/08/07
Description: Brown/White, Heterogeneous, Fibrous, Bulk Material **Asbestos Types:** **Other Material:** Cellulose 15 %, Non-fibrous 85 %			
7932	907031027-148 **Location:** 2X4 Fissured Ceiling Panel	***No***	NAD (by CVES) by Raymundo Orozco on 03/08/07
Description: Grey, Heterogeneous, Fibrous, Bulk Material **Asbestos Types:** **Other Material:** Cellulose 75 %, Fibrous glass 5 %, Non-fibrous 20 %			

See Reporting notes on last page

PLM Bulk Asbestos Report

107-0008; Webster E.S; SMMUSD

Client No. / HGA	Lab No.	Asbestos Present	Total % Asbestos
7933	907031027-149L1 **Location:** 4 In Dark Blue Cove Base & Glue **Description:** Blue, Homogeneous, Non-Fibrous, Cove Base **Asbestos Types:** **Other Material:** Non-fibrous 100 %	***No***	NAD (by CVES) by Raymundo Orozco on 03/08/07
7933	907031027-149L2 **Location:** 4 In Dark Blue Cove Base & Glue **Description:** Cream, Homogeneous, Non-Fibrous, Mastic **Asbestos Types:** **Other Material:** Non-fibrous 100 %	***No***	NAD (by CVES) by Raymundo Orozco on 03/08/07
7934	907031027-150L1 **Location:** Carpet Glue **Description:** Blue, Heterogeneous, Fibrous, Carpet **Asbestos Types:** **Other Material:** Synthetic fibers 90 %, Non-fibrous 10 %	***No***	NAD (by CVES) by Raymundo Orozco on 03/08/07
7934	907031027-150L2 **Location:** Carpet Glue **Description:** Cream, Homogeneous, Non-Fibrous, Mastic **Asbestos Types:** **Other Material:** Synthetic fibers 5 %, Non-fibrous 95 %	***No***	NAD (by CVES) by Raymundo Orozco on 03/08/07
7934	907031027-150L3 **Location:** Carpet Glue **Description:** Brown, Heterogeneous, Fibrous, Flooring **Asbestos Types:** **Other Material:** Cellulose 95 %, Non-fibrous 5 %	***No***	NAD (by CVES) by Raymundo Orozco on 03/08/07
7935	907031027-151L1 **Location:** 12X12 Light Blue **Description:** Grey, Homogeneous, Non-Fibrous, Floor Tile **Asbestos Types:** **Other Material:** Non-fibrous 100 %	***No***	NAD (by CVES) by Raymundo Orozco on 03/08/07

See Reporting notes on last page

PLM Bulk Asbestos Report

107-0008; Webster E.S; SMMUSD

Client No. / HGA	Lab No.	Asbestos Present	Total % Asbestos
7935	907031027-151L2	*No*	NAD (by CVES) by Raymundo Orozco on 03/08/07

Location: 12X12 Light Blue

Description: Yellow, Homogeneous, Non-Fibrous, Mastic
Asbestos Types:
Other Material: Cellulose 2 %, Non-fibrous 98 %

Reporting Notes:

Analyzed By: Raymundo Orozco _____; Date Analyzed: 3/8/2007 3/8/07
*NAD = no asbestos detected; Detection Limit <1%; Reporting Limits: CVES = 1%, 400 Pt Ct = 0.25%, 1000 Pt Ct = 0.1%; NA = not analyzed; NA/PS = not analyzed / positive stop; PLM (polarized light microscopy) Bulk Asbestos Analysis by EPA 600/M4-82-020 per 40 CFR 763 (NVLAP Lab #200346-0, CA ELAP lab #2322); Note: PLM is not consistently reliable in detecting asbestos in floor coverings and similar NOB materials. TEM is currently the only method that can be used to determine if this material can be considered or treated as non-asbestos-containing in New York State (also see EPA Advisory for floor tile, FR 59, 146, 38970, 8/1/94). NIST Accreditation requirements mandate that this report must not be reproduced except in full with the approval of the laboratory. This PLM report relates ONLY to the items tested.
Reviewed By: _____ 3/8/2007

AMERISCI
www.amerisci.com

Asbestos Analysis Chain of Custody

AMERISCI JOB #: 907031027

AMERISCI LOS ANGELES
24416 S Main St. Suite 308
Carson, CA 90745
Phone (310) 834-4868
Fax (310) 834-4772

COMPANY:	ADDRESS:	P.O.#:
CTL		30918

PROJECT INFORMATION	ANALYSIS TYPE	TURNAROUND TIME: RUSH	24 HR	48 HR	72 HR	5 DAY	OTHER	AIR FILTER INFORMATION:	
JOB NAME: WEBSTER E.S	TEM AHERA							MCE	
	TEM EPA LEVEL II							PC	
JOB NUMBER: 107-0008	TEM DUST MICROVAC							25 mm	
	TEM BULK							37 mm	
JOB MANAGER: Cesar Ruvalcaba.	PCM							0.45 um	
	PLM BULK					✓		0.80 um	
JOB DESCRIPTION: SMMUSD	PLM 1000 P. C.							TEMP:	
	OTHER:							OTHER:	

INITIAL RESULTS DELIVERY: ☐ FAX ☐ EMAIL ☐ VERBAL ☐ MAIL ONLY

RETURN SAMPLES YES_____ NO_____

REPORTS TO:

PHONE:

INVOICE TO:

FAX:

COMMENTS:

EMAIL:

PAGER/CELL:

SAMPLE ID	SAMPLE LOCATION	START TIME	STOP TIME	TOTAL TIME	X LITERS /MIN.	= TOTAL VOLUME	DATE COLLECTED
7785	STUCCO STOP 1ST. POS.			≠	1%		
86							
87							
88							
89	PLASTER						
90							
91							
92							
93							
94	DRYWALL						
95	DRYWALL JOINT COMP. STOP 1ST. POS.			≠	1%		
96							
97							
98	CARPET GLUE						
99	12X12 LIGHT GREEN SPECKLED FLOOR TILE & GLUE						
7800	4 in. DARK GREEN COVEBASE & GLUE						
7801	4 in BROWN COVEBASE & GLUE						
02	4 in GRAY COVEBASE & GLUE						
03	2X4 FISSURED CEILING PANEL						
04	~~2X~~ ~~[illegible]~~ HVAC DUCT TAPE GRAY.						

SAMPLED BY: Victor Sanchez	DATE/TIME:	RECEIVED BY:	DATE/TIME:
RELINQUISHED BY:	DATE/TIME: 3-1-07	RECEIVED BY:	DATE/TIME: 3/1/07
RELINQUISHED BY:	DATE/TIME:	RECEIVED IN LAB BY:	DATE/TIME:

AMERI SCI
www.amerisci.com

Asbestos Analysis Chain of Custody

AMERISCI JOB #: 907031027

AMERISCI LOS ANGELES
24416 S Main St. Suite 308
Carson, CA 90745
Phone (310) 834-4868
Fax (310) 834-4772

COMPANY:	ADDRESS:	P.O.#:
CTL		30918

PROJECT INFORMATION	ANALYSIS TYPE	TURNAROUND TIME: RUSH	24 HR	48 HR	72 HR	5 DAY	OTHER	AIR FILTER INFORMATION:	
JOB NAME: Webster ES.	TEM AHERA							MCE	
	TEM EPA LEVEL II							PC	
JOB NUMBER: 107-0008	TEM DUST MICROVAC	■						25 mm	
	TEM BULK	■						37 mm	
JOB MANAGER: Cesar Rebolledo	PCM							0.45 um	
	PLM BULK					✓		0.80 um	
JOB DESCRIPTION: SMMUSD	PLM 1000 P. C.	■						TEMP:	
	OTHER:							OTHER:	

INITIAL RESULTS DELIVERY: ☐ FAX ☐ EMAIL ☐ VERBAL ☐ MAIL ONLY

RETURN SAMPLES YES_____ NO_____

REPORTS TO:

PHONE:

INVOICE TO:

FAX:

COMMENTS:

EMAIL:

PAGER/CELL:

SAMPLE ID	SAMPLE LOCATION	START TIME	STOP TIME	TOTAL TIME	X LITERS /MIN.	= TOTAL VOLUME	DATE COLLECTED
7805	WINDOW PUTTY						
7830	DRYWALL						
7831	DRYWALL JOINT COMPOUND		STOP	FIRST	POS.	D 1%	
7832							
7833							
7834	DRYWALL						
7835	DRYWALL JOINT COMPOUND		STOP	1ST	POS.	D 1%	
7836							
7837							
7822	STUCCO						
7823							
7824							
7825							
7826	DRYWALL JOINT COMPOUND						
7827							
7828							
7829	WINDOW PUTTY						

SAMPLED BY: Vinton Schuber	DATE/TIME:	RECEIVED BY:	DATE/TIME:
RELINQUISHED BY:	DATE/TIME: 3-1-07	RECEIVED BY: OM 3/1/07 1305	DATE/TIME:
RELINQUISHED BY:	DATE/TIME:	RECEIVED IN LAB BY:	DATE/TIME:

AMERI SCI
www.amerisci.com

Asbestos Analysis Chain of Custody

AMERISCI JOB #: 907031027

AMERISCI LOS ANGELES
24416 S Main St. Suite 308
Carson, CA 90745
Phone (310) 834-4868
Fax (310) 834-4772

COMPANY:	ADDRESS:	P.O.#: 30918

PROJECT INFORMATION	ANALYSIS TYPE	TURNAROUND TIME: RUSH	24 HR	48 HR	72 HR	5 DAY	OTHER	AIR FILTER INFORMATION:	
JOB NAME: WEBSTER. E.S.	TEM AHERA							MCE	
	TEM EPA LEVEL II							PC	
JOB NUMBER: 107-0008	TEM DUST MICROVAC							25 mm	
	TEM BULK							37 mm	
JOB MANAGER: Cesar Ruvalcaba.	PCM							0.45 um	
	PLM BULK					✓		0.80 um	
JOB DESCRIPTION: SMMUSD	PLM 1000 P. C.							TEMP:	
	OTHER:							OTHER:	

INITIAL RESULTS DELIVERY: ☐ FAX ☐ EMAIL ☐ VERBAL ☐ MAIL ONLY

RETURN SAMPLES YES_____ NO_____

REPORTS TO:

PHONE:

INVOICE TO:

FAX:

COMMENTS:

EMAIL:

PAGER/CELL:

SAMPLE ID	SAMPLE LOCATION	START TIME	STOP TIME	TOTAL TIME	X LITERS /MIN.	= TOTAL VOLUME	DATE COLLECTED
7806	STUCCO STOP 1ST POS.		Ø 1%				
7807							
7808							
7809							
7810	window. PUTTY.						
7811	12" Random pinhole ceiling Tile glue.						
7812	ROUGH PLASTER. STOP 1ST. POS. Ø 1%						
7813							
7814							
7815	Drywall JOINT compound STOP 1ST POS. Ø 1%						
7816							
7817							
7818	Drywall						
7819	Drywall JOINT compound STOP 1ST. POS. Ø 1%						
7820							
7821							

SAMPLED BY: Victor Sanchez.	DATE/TIME:	RECEIVED BY:	DATE/TIME:
RELINQUISHED BY:	DATE/TIME: 3-1-07	RECEIVED BY:	DATE/TIME: 3/1/07 1305
RELINQUISHED BY:	DATE/TIME:	RECEIVED IN LAB BY:	DATE/TIME:

AMERISCI
www.amerisci.com

Asbestos Analysis Chain of Custody

AMERISCI JOB #: 907031027

AMERISCI LOS ANGELES
24416 S Main St. Suite 308
Carson, CA 90745
Phone (310) 834-4868
Fax (310) 834-4772

COMPANY:	ADDRESS:	P.O.#: 30918

PROJECT INFORMATION	ANALYSIS TYPE	TURNAROUND TIME: RUSH	24 HR	48 HR	72 HR	5 DAY	OTHER	AIR FILTER INFORMATION:	
JOB NAME: CTC	TEM AHERA							MCE	
	TEM EPA LEVEL II							PC	
JOB NUMBER: 107-0008	TEM DUST MICROVAC	■						25 mm	
	TEM BULK	■						37 mm	
JOB MANAGER: Cesar Rivalcaba	PCM							0.45 um	
	PLM BULK					✓		0.80 um	
JOB DESCRIPTION: SMMUSD	PLM 1000 P. C.	■						TEMP:	
	OTHER:							OTHER:	

INITIAL RESULTS DELIVERY: ☐ FAX ☐ EMAIL ☐ VERBAL ☐ MAIL ONLY

RETURN SAMPLES YES_____ NO_____

REPORTS TO:

PHONE:

INVOICE TO:

FAX:

COMMENTS:

EMAIL:

PAGER/CELL:

SAMPLE ID	SAMPLE LOCATION	START TIME	STOP TIME	TOTAL TIME	X LITERS /MIN.	= TOTAL VOLUME	DATE COLLECTED
7889	STUCCO STOP 1ST POS.			≯1%			
7890							
7891							
7892							
7893							
7894	ROUGH PLASTER CEILING						
7895							
7896							
7897	4in brown cove base & glue						
7898	window putty						
7899	DRYWALL						
7900	DRYWALL JOINT COMPOUND			STOP 1ST POS.			≯1%
7901							
7902							
7903							
7904							

SAMPLED BY: Victor Sanchez	DATE/TIME:	RECEIVED BY: —	DATE/TIME:
RELINQUISHED BY:	DATE/TIME: 3-1-07	RECEIVED BY:	DATE/TIME:
RELINQUISHED BY:	DATE/TIME:	RECEIVED IN LAB BY:	DATE/TIME:

AMERISCI
www.amerisci.com

Asbestos Analysis Chain of Custody

AMERISCI JOB #: 907031027

AMERISCI LOS ANGELES
24416 S Main St. Suite 308
Carson, CA 90745
Phone (310) 834-4868
Fax (310) 834-4772

COMPANY:	ADDRESS:	P.O.#: 30918

PROJECT INFORMATION	ANALYSIS TYPE	TURNAROUND TIME: RUSH	24 HR	48 HR	72 HR	5 DAY	OTHER	AIR FILTER INFORMATION:	
JOB NAME: CTL	TEM AHERA							MCE	
	TEM EPA LEVEL II							PC	
JOB NUMBER: 107-0008	TEM DUST MICROVAC	■						25 mm	
	TEM BULK	■						37 mm	
JOB MANAGER: Cesar Rivulcaba	PCM							0.45 um	
	PLM BULK							0.80 um	
JOB DESCRIPTION: SAMUSD	PLM 1000 P. C.	■						TEMP:	
	OTHER:							OTHER:	

INITIAL RESULTS DELIVERY: ☐ FAX ☐ EMAIL ☐ VERBAL ☐ MAIL ONLY

RETURN SAMPLES YES_____ NO_____

REPORTS TO:

PHONE:

INVOICE TO:

FAX:

COMMENTS:

EMAIL:

PAGER/CELL:

SAMPLE ID	SAMPLE LOCATION	START TIME	STOP TIME	TOTAL TIME X	LITERS /MIN. =	TOTAL VOLUME	DATE COLLECTED
7838	STUCCO	STOP 1ST POS.				∅ 1%	
7839							
7840							
7841							
7842							
7843	Drywall						
7844	Drywall Joint compound			STOP 1ST POS.		∅ 1%	
7845							
7846							
7847	ROUGH PLASTER wall	STOP 1ST POS.				∅ 1%	
7848							
7849							
7850	SMOOTH PLASTER WALL						
7851							
7852							
7853							
7854	CARPET GLUE						
7855	BROWN FLOOR TILE & MASTIC						
7856	12X12 Gray speckled floor tile.						

SAMPLED BY: Victor Sanchez	DATE/TIME:	RECEIVED BY:	DATE/TIME:
RELINQUISHED BY:	DATE/TIME: 3-1-07	RECEIVED BY:	DATE/TIME:
RELINQUISHED BY:	DATE/TIME:	RECEIVED IN LAB BY:	DATE/TIME:

AMERISCI
www.amerisci.com

Asbestos Analysis Chain of Custody

AMERISCI JOB #: 907031027

AMERISCI LOS ANGELES
24416 S Main St. Suite 308
Carson, CA 90745
Phone (310) 834-4868
Fax (310) 834-4772

COMPANY:	ADDRESS:	P.O.#:
CTL		30918

PROJECT INFORMATION	ANALYSIS TYPE	TURNAROUND TIME: RUSH	24 HR	48 HR	72 HR	5 DAY	OTHER	AIR FILTER INFORMATION:	
JOB NAME: Webster ES.	TEM AHERA							MCE	
	TEM EPA LEVEL II							PC	
JOB NUMBER: 107-0008	TEM DUST MICROVAC							25 mm	
	TEM BULK							37 mm	
JOB MANAGER: Cesar Ruvalcaba.	PCM							0.45 um	
	PLM BULK					✓		0.80 um	
JOB DESCRIPTION: SMMUSD	PLM 1000 P. C.							TEMP:	
	OTHER:							OTHER:	

INITIAL RESULTS DELIVERY: ☐ FAX ☐ EMAIL ☐ VERBAL ☐ MAIL ONLY

RETURN SAMPLES YES_____ NO_____

REPORTS TO:

PHONE:

INVOICE TO:

FAX:

COMMENTS:

EMAIL:

PAGER/CELL:

SAMPLE ID	SAMPLE LOCATION	START TIME	STOP TIME	TOTAL TIME	X LITERS /MIN.	= TOTAL VOLUME	DATE COLLECTED
7857	STUCCO STOP 1ST.	POS.	∅	1%			
7858							
7859							
7860							
7861							
7866	ROUGH PLASTER walls						
7867							
7862	SMOOTH PLASTER ceiling						
7863							
7864	SMOOTH PLASTER WALL						
7865							
7868	BROWN FLOOR tile & MASTIC						
7869	12" peghole ceiling tile & glue.						
7870	drywall.						
7905	STUCCO STOP 1ST POS.			∅	1%		
7906							
7907							
7908							
7909							
7910	window PUTTY.						

SAMPLED BY: Victor Sanchez	DATE/TIME:	RECEIVED BY: —	DATE/TIME:
RELINQUISHED BY:	DATE/TIME: 3-1-07	RECEIVED BY:	DATE/TIME: 1305 3/1/07
RELINQUISHED BY:	DATE/TIME:	RECEIVED IN LAB BY:	DATE/TIME:

AMERI SCI
www.amerisci.com

Asbestos Analysis Chain of Custody

AMERISCI JOB #: 907031027

AMERISCI LOS ANGELES
24416 S Main St. Suite 308
Carson, CA 90745
Phone (310) 834-4868
Fax (310) 834-4772

COMPANY:	ADDRESS:	P.O.#: 30918

PROJECT INFORMATION	ANALYSIS TYPE	TURNAROUND TIME: RUSH	24 HR	48 HR	72 HR	5 DAY	OTHER	AIR FILTER INFORMATION:	
JOB NAME:	TEM AHERA							MCE	
	TEM EPA LEVEL II							PC	
JOB NUMBER:	TEM DUST MICROVAC	■						25 mm	
	TEM BULK	■						37 mm	
JOB MANAGER:	PCM							0.45 um	
	PLM BULK					✓		0.80 um	
JOB DESCRIPTION:	PLM 1000 P. C.	■						TEMP:	
	OTHER:							OTHER:	

INITIAL RESULTS DELIVERY: ☐ FAX ☐ EMAIL ☐ VERBAL ☐ MAIL ONLY

RETURN SAMPLES YES_____ NO_____

REPORTS TO:

PHONE:

INVOICE TO:

FAX:

COMMENTS:

EMAIL:

PAGER/CELL:

SAMPLE ID	SAMPLE LOCATION	START TIME	STOP TIME	TOTAL TIME	X LITERS /MIN.	= TOTAL VOLUME	DATE COLLECTED
7911	gray with black dots. Floor & heating						
7912	ROUGH PLASTER ceiling						
7913	ROUGH PLASTER walls	STOP 1ST	POS. Ø	1%			
7914							
7915							
7916							
7917	SMOOTH PLASTER. ceiling		STOP 1ST	POS. Ø	1%		
7918							
7919							
7920	SMOOTH PLASTER WALL						
7921							
7922							
7923							
7924							
7925							
7926	Drywall						
7927	4in light green cove base & glue.						
7928	12x12 pinkish floor tile with dark spots						
7929	HOT brick						
7930	4in. brown cove base & glue						

SAMPLED BY: Victor Sanchez	DATE/TIME:	RECEIVED BY:	DATE/TIME:
RELINQUISHED BY:	DATE/TIME: 3-1-07	RECEIVED BY:	DATE/TIME: 1305 3/1/07
RELINQUISHED BY:	DATE/TIME:	RECEIVED IN LAB BY:	DATE/TIME:

AMERI SCI
www.amerisci.com

Asbestos Analysis Chain of Custody

AMERISCI JOB #: 907031027

AMERISCI LOS ANGELES
24416 S Main St. Suite 308
Carson, CA 90745
Phone (310) 834-4868
Fax (310) 834-4772

COMPANY:	ADDRESS:	P.O.#:
CTL		30918

PROJECT INFORMATION	ANALYSIS TYPE	TURNAROUND TIME: RUSH	24 HR	48 HR	72 HR	5 DAY	OTHER	AIR FILTER INFORMATION:	
JOB NAME: Webster E.S.	TEM AHERA							MCE	
	TEM EPA LEVEL II							PC	
JOB NUMBER: 107-0008	TEM DUST MICROVAC	■						25 mm	
	TEM BULK	■						37 mm	
JOB MANAGER: Cesar Rebolledo	PCM							0.45 um	
	PLM BULK					✓		0.80 um	
JOB DESCRIPTION: BMMUSD	PLM 1000 P. C.	■						TEMP:	
	OTHER:							OTHER:	

INITIAL RESULTS DELIVERY: ☐ FAX ☐ EMAIL ☐ VERBAL ☐ MAIL ONLY

RETURN SAMPLES YES_____ NO_____

REPORTS TO:

PHONE:

INVOICE TO:

FAX:

COMMENTS:

EMAIL:

PAGER/CELL:

SAMPLE ID	SAMPLE LOCATION	START TIME	STOP TIME	TOTAL TIME	X LITERS /MIN.	= TOTAL VOLUME	DATE COLLECTED
7877	Drywall						
7878	Drywall Joint compound	STOP 1ST DOS			1%		
7879							
7880							
7881	smooth PLASTER						
7882							
7883							
7884							
7885							
7886							
7887							
7888	brown FLOOR tile & MASTIC						
7871	STUCCO						
7872							
7873							
7874	ROUGH PLASTER ceiling						
7875							
7876	window PUTTY						

SAMPLED BY: Victor Sandoval	DATE/TIME:	RECEIVED BY:	DATE/TIME:
RELINQUISHED BY:	DATE/TIME: 3-1-07	RECEIVED BY:	DATE/TIME: 1305 3/1/07
RELINQUISHED BY:	DATE/TIME:	RECEIVED IN LAB BY:	DATE/TIME:

AMERI SCI
www.amerisci.com

Asbestos Analysis Chain of Custody

AMERISCI JOB #: 907031027

AMERISCI LOS ANGELES
24416 S Main St. Suite 308
Carson, CA 90745
Phone (310) 834-4868
Fax (310) 834-4772

COMPANY:	ADDRESS:	P.O.#:
CTL		30918

PROJECT INFORMATION	ANALYSIS TYPE	TURNAROUND TIME: RUSH	24 HR	48 HR	72 HR	5 DAY	OTHER	AIR FILTER INFORMATION:	
JOB NAME: Webster E.S	TEM AHERA							MCE	
	TEM EPA LEVEL II							PC	
JOB NUMBER: 107-0008	TEM DUST MICROVAC	■						25 mm	
	TEM BULK	■						37 mm	
JOB MANAGER: Cesar Ruvalcaba	PCM							0.45 um	
	PLM BULK					✓		0.80 um	
JOB DESCRIPTION: SMMUSD	PLM 1000 P. C.	■						TEMP:	
	OTHER:							OTHER:	

INITIAL RESULTS DELIVERY: ☐ FAX ☐ EMAIL ☐ VERBAL ☐ MAIL ONLY

RETURN SAMPLES YES_____ NO_____

REPORTS TO:

PHONE:

INVOICE TO:

FAX:

COMMENTS:

EMAIL:

PAGER/CELL:

SAMPLE ID	SAMPLE LOCATION	START TIME	STOP TIME	TOTAL TIME	X	LITERS /MIN.	=	TOTAL VOLUME	DATE COLLECTED
7931	drywall								
7932	2x4 Fissured ceiling panel.								
7933	4 in dark blue coveback & glue.								
7934	carpet glue.								
7935	12x12 Light blue speckled Floor tile.								

SAMPLED BY: Victor Sanchez	DATE/TIME:	RECEIVED BY:	DATE/TIME:
RELINQUISHED BY:	DATE/TIME: 3-1-07	RECEIVED BY:	DATE/TIME:
RELINQUISHED BY:	DATE/TIME:	RECEIVED IN LAB BY:	DATE/TIME:

FIELD BULK SAMPLE LIST

CLIENT: SMMUSD
PROJECT NO.: 107-0008
PROJECT NAME: Webster E.S.

Technician: V. Sauter
Date: 2-28-07
Page: 3 of 3

PHOTO #	MATERIAL	SAMPLE #	SAMPLE LOCATION	MATERIAL LOCATION	EST. QTY.	F	D
	12x12 light green flr tile & glue	7799	Bldg A	RMS 1-4	1000 sq. ft	N	N
	4in dark green cove base & glue	7800		RMS 1-4 carpeted area	280 lin. ft	N	N
	4in gray cove base & glue.	7802		RM 1-4 tiled area	120 lin. ft	N	N
	HVAC DUCT TAPE	7804		RMS 1-4 htr closets	4 ea	N	N
	carpet glue	7854	Bldg E				
		7798	Bldg A				
	HTR unit	Assumed		htr RMS in RMS 1-4	4 ea	N	N
	Gravel roof core			ROOF	5200 sq. ft	N	N
	ROOF MASTIC			ROOF penetrations	40 lin. ft	N	N
	chalkboard, (dry erase)			RM 1-4	8 ea	N	N

~~Check for insul. for check~~

Sample Reinspection Form 1. Original AHERA Inspection Information Abstracted from the Management Plan

School Webster S.S. Building A Date(s) of Original AHERA Inspection

Homogeneous sampling areas: ID number	Homogeneous sampling areas: Material description	Material category	Asbestos content	Friability	AHERA assessment category (1-7, X, None)	Recorded locations of material for each assessment category	Response actions taken/ renovations/other comments
W0901	12" brown floor tile with peach streaks with mastic	TSI Surf. (Misc.)	Assumed (Yes) No	F NF X		Observed in Rm 20 under carpet. Observed in Rm 19 (throughout) 16003 sq FT	Rm 19 tile is in poor condition at entrance & D cells buckling
W2401	Exterior wall stucco Tile add'l accordingly	TSI (Surf.) Misc.	Assumed Yes No	F NF X			
W2501 thru W2505	Exterior stucco ceiling	TSI (Surf.) Misc.	Assumed Yes (No)	F NF X		Overhang ceiling on entire site	
W2902 W2904	Canvas wrap duct insulation	TSI Surf. (Misc.)	Assumed Yes (No)	F NF X		HVAC room	
W2904	Canvas wrap duct insulation	TSI Surf. (Misc.)	Assumed Yes (No)	F NF X			
W3101	Flex connectors Sample if feasible	(TSI) Surf. (Misc.)	Assumed Yes No	F NF X			

Inspector: Information abstracted by _____ Date _____

Friability: F = friable, NF = nonfriable, X = not applicable (material is non-ACBM)

AHERA assessment category: 1 = Damaged or significantly damaged TSI ACBM, 2 = Damaged friable surfacing ACBM, 3 = Significantly damaged friable surfacing ACBM, 4 = Damaged or significantly damaged friable miscellaneous ACBM, 5 = ACBM with potential for damage, 6 = ACBM with potential for significant damage, 7 = Any remaining friable ACBM or friable suspected ACBM, X = not applicable (material is non-ACBM or nonfriable surfacing or miscellaneous material), None = No assessment category provided in original inspection.

Note to inspectors: Floor tile abatement in rooms 17, 18, 19, 20 !
Window putty abatement 17, 18, 19, 20
Heater rooms 17, 18, 19, 20. - ~~not clear at present check for asbestos pipe insulation~~ joint tape & flex connectors check for fire doors & exterior lines

Sample Reinspection Form 1. Original AHERA Inspection Information Abstracted from the Management Plan

School Webster E.S. Building A Date(s) of Original AHERA Inspection

Homogeneous sampling areas							
ID number	Material description	Material category	Asbestos content	Friability	AHERA assessment category (1-7, X, None)	Recorded locations of material for each assessment category	Response actions taken/ renovations/other comments
7785	stucco	TSI	Assumed	F		EXT. walls	N/E
7786		Surf.	Yes	NF		3000 sq. ft	N/W
7787		Misc.	No	X			S/W
7788		TSI	Assumed	F			SE
W2401		Surf.	Yes	NF			
		Misc.	No	X			
7789	PLASTER	TSI	Assumed	F		RMS 17-20	RM 17 S/E
7790		Surf.	Yes	NF		AND HTR CLOSETS	RM 18 N/E
7791		Misc.	No	X		3500 sq. ft	RM 20 N/E
7792		TSI	Assumed	F			HTR CLS 1 S/W
7793		Surf.	Yes	NF			HTR CLST 2 S/W
		Misc.	No	X			
7794	Drywall	TSI	Assumed	F		RM 17, 18 & RM 20	RM 20 N/W
		Surf.	Yes	NF		dividing walls	
		Misc.	No	X		800 sq. ft	
7795	Drywall J. comp.	TSI	Assumed	F			RM 20 N/W.
7796		Surf.	Yes	NF			RM 17 S/E
7797		Misc.	No	X			Hallway S/E

Information abstracted by V. Sanchez Date 2-27-07

Friability: F = friable, NF = nonfriable, X = not applicable (material is non-ACBM)

AHERA assessment category: 1 = Damaged or significantly damaged TSI ACBM, 2 = Damaged friable surfacing ACBM, 3 = Significantly damaged friable surfacing ACBM, 4 = Damaged or significantly damaged friable miscellaneous ACBM, 5 = ACBM with potential for damage, 6 = ACBM with potential for significant damage, 7 = Any remaining friable ACBM or friable suspected ACBM, X = not applicable (material is non-ACBM or nonfriable surfacing or miscellaneous material), None = No assessment category provided in original inspection.

Sample Reinspection Form 1. Original AHERA Inspection Information Abstracted from the Management Plan

School Webster. E.S Building A Date(s) of Original AHERA Inspection

Homogeneous sampling areas		Material category	Asbestos content	Friability	AHERA assessment category (1-7, X, None)	Recorded locations of material for each assessment category	Response actions taken/ renovations/other comments
ID number	Material description						
7798	carpet glue	TSI Surf. Misc.	Assumed Yes No	F NF X		RMS 17-20 2800 sq. FT.	RM 20 CTR.
7799	12x12 Light green speckled. Fur tile & glue	TSI Surf. Misc.	Assumed Yes No	F NF X		RMS 17, RM 18 → undercarpet RM 20 2200 sq. Ft	RM17 N/W.
7800	4 in Dark green cove base & glue	TSI Surf. Misc.	Assumed Yes No	F NF X		RM 17 90 Li. FT. RM 20 RM 19	RM 17 NO. CTR
7801	4 in brown cove base & glue	TSI Surf. Misc.	Assumed Yes No	F NF X		RM 18 75 Li FT	RM 18 S/W.
7802	4 in grey cove base & glue	TSI Surf. Misc.	Assumed Yes No	F NF X		RM 20 30 Li. FT. (West end)	RM 20 S/W
7803	2x4 Fissured ceiling panel	TSI Surf. Misc.	Assumed Yes No	F NF X		RMS 17-20 3200 sq. FT	RM 19 CTR

Information abstracted by Victor Sanchez Date

Friability: F = friable, NF = nonfriable, X = not applicable (material is non-ACBM)

AHERA assessment category: 1 = Damaged or significantly damaged TSI ACBM, 2 = Damaged friable surfacing ACBM, 3 = Significantly damaged friable surfacing ACBM, 4 = Damaged or significantly damaged friable miscellaneous ACBM, 5 = ACBM with potential for damage, 6 = ACBM with potential for significant damage, 7 = Any remaining friable ACBM or friable suspected ACBM, X = not applicable (material is non-ACBM or nonfriable surfacing or miscellaneous material), None = No assessment category provided in original inspection.

Sample Reinspection Form 1. Original AHERA Inspection Information Abstracted from the Management Plan

School Webster E.S Building A Date(s) of Original AHERA Inspection

Homogeneous sampling areas		Material category	Asbestos content	Friability	AHERA assessment category (1-7, X, None)	Recorded locations of material for each assessment category	Response actions taken/ renovations/other comments
ID number	Material description						
7804	HVAC DUCT Tape (gray)	TSI Surf. Misc.	Assumed Yes No	F NF X		HTR CLOSETS 1, 2, 3, 4 20 sq. FT	HTR CLOSET #3 CTR
Assumed	Gravel roof core.	TSI Surf. Misc.	Assumed Yes No	F NF X		4,200 sq. FT. ROOF	
Assumed	ROOF MASTIC	TSI Surf. Misc.	Assumed Yes No	F NF X		roof penetration 25 sq. FT	
Assumed	chalkboards	TSI Surf. Misc.	Assumed Yes No	F NF X		RMS 17-20 12 each	chalkboards are NOT the originals they are dry/erase
Assumed	htr. units	TSI Surf. Misc.	Assumed Yes No	F NF X		HTR closets 4 ea	
7805	window putty.	TSI Surf. Misc.	Assumed Yes No	F NF X		Exterior windows 2500 Li. FT.	N/W.

Information abstracted by _____ Date _____

Friability: F = friable, NF = nonfriable, X = not applicable (material is non-ACBM)

AHERA assessment category: 1 = Damaged or significantly damaged TSI ACBM, 2 = Damaged friable surfacing ACBM, 3 = Significantly damaged friable surfacing ACBM, 4 = Damaged or significantly damaged friable miscellaneous ACBM, 5 = ACBM with potential for damage, 6 = ACBM with potential for significant damage, 7 = Any remaining friable ACBM or friable suspected ACBM, X = not applicable (material is non-ACBM or nonfriable surfacing or miscellaneous material), None = No assessment category provided in original inspection.

Flexible collars in HTR closets consist of canvas material

CTL ENVIRONMENTAL SERVICES
FIELD BULK SAMPLE LIST

CLIENT: SHMUSD
PROJECT NO.: 107-0008
PROJECT NAME: Webster E.S Bldg B

Technician: V. Sanchez
Date: 2-28-07
Page: 1 of ___

PHOTO #	MATERIAL	SAMPLE #	SAMPLE LOCATION	MATERIAL LOCATION	EST. QTY.	F	D
	STUCCO	7822	S/E	exterior walls	2200 sq.ft.	N	N
		7823	N/E				
		7824	N/W				
		7825	S/W				
	W 2402	W2402					
	Gypsum/w/JC, W1002 W 1004	W1002 POS. W1004	Gypsum wall w/JC	classrooms & work rms. (dividing walls)	1600 sq.ft.	N	N
	W 1104	W1104	Gypsum/drywall	Toilets & storage rms in classrooms.	1600 sq.ft	N	N
	Drywall J.C.	7826	RM 11 storage rm S/W				
		7827	RM 12 storage rm S/E				
		7828	RM 11 Toilet N/W				
	window putty	7829	N/E	ext. walls	1200 sq.ft.	N	

CTL ENVIRONMENTAL SERVICES
FIELD BULK SAMPLE LIST

CLIENT: SOMUSD
PROJECT NO.: 107-0008
PROJECT NAME: Webster E.S. Bldg B

Bldg B

Technician: V. Suarez
Date: 2-28-07
Page: 2 of ___

PHOTO #	MATERIAL	SAMPLE #	SAMPLE LOCATION	MATERIAL LOCATION	EST. QTY.	F	D
	Drywall	7830	storage rm N/E	storage rm	750 sq.ft	N	N
	Drywall J.C.	7831	N/E	storage rm			
		7832	N/W				
		7833	S/W.				
	9" gray floor tile w/ yellow streaks	7834	POS.	work rm 2 & 1	80 sq.ft	N	N.
	Drywall	7834	HTRRM 2 S/W	HTR ROOMS.	600 sq.ft	N	N
	Drywall J.C.	7835					
		7836	HTR RM 2 S/E				
		7837	S/W				

CTL ENVIRONMENTAL SERVICES
FIELD BULK SAMPLE LIST

CLIENT: SM.MUSD
PROJECT NO.: 1070008
PROJECT NAME: WEBSTER ES.

bldg B

Technician: V. Sanchez
Date: 2-28-07
Page: 3 of ___

PHOTO #	MATERIAL	SAMPLE #	SAMPLE LOCATION	MATERIAL LOCATION	EST. QTY.	F	D
	12x12 Light green vinyl tile & glue	7999	Bldg A	RM 11, 12	~~1800~~ 500 sq. ft.	N	N
	4in dark green coveBase & glue	7800			180 Li. ft	N	N
	carpet glue	7854 7798			1800 sq. ft	N	N
	2x4 fissured ceiling panel	7803			2300 sq. ft	N	N
	HTR unit.	Assumed		HTR CLOSETS	2 ea		
	Gravel roofcove.	Assumed		ROOF	2600 sq. ft	N	N
	Roofmastic	Assumed		roof penetrations	30 sq. ft	N	C
	chalkboards,	Assumed	not original (dry/erase new)	RMS 11 & 12	4 ea		

ample Reinspection Form 1. Original AHERA Inspection Information Abstracted from the Management Plan

chool Webster E.S Building B Date(s) of Original AHERA Inspection ____

Homogeneous sampling areas		Material category	Asbestos content	Friability	AHERA assessment category (1-7, X, None)	Recorded locations of material for each assessment category	Response actions taken/ renovations/other comments
ID number	Material description						
W0601	12" brown floor tile w/ white streaks + mastic	TSI Surf. Misc.	Assumed Yes No	F NF X		kindergarten classroom removed.	
W0701	9" green floor tile w/ yellow streaks + mastic	TSI Surf. Misc.	Assumed Yes No	F NF X		Work rooms 1 & 2 still on site	
W1002 W1004	Gypsum walls w/ joint compound	TSI Surf. Misc.	Assumed Yes No <1%	F NF X			
W1104	Gypsum ceiling	TSI Surf. Misc.	Assumed Yes No	F NF X			
W1202	12" random pattern ceiling tile check for mastic	TSI Surf. Misc.	Assumed Yes No	F NF X		MOST OF IT removed. left A row on south side to hold elec conduit.	
W2402	Exterior stucco walls Sample addressed to 3	TSI Surf. Misc.	Assumed Yes No	F NF X			

Information abstracted by inspector. Date ____

Friability: F = friable, NF = nonfriable, X = not applicable (material is non-ACBM)

AHERA assessment category: 1 = Damaged or significantly damaged TSI ACBM, 2 = Damaged friable surfacing ACBM, 3 = Significantly damaged friable surfacing ACBM, 4 = Damaged or significantly damaged friable miscellaneous ACBM, 5 = ACBM with potential for damage, 6 = ACBM with potential for significant damage, 7 = Any remaining friable ACBM or friable suspected ACBM, X = not applicable (material is non-ACBM or nonfriable surfacing or miscellaneous material), None = No assessment category provided in original inspection.

ample Reinspection Form 1. Original AHERA Inspection Information Abstracted from the Management Plan

Date(s) of Original AHERA Inspection ____

chool Webster E.S. Building B

Homogeneous sampling areas		Material category	Asbestos content	Friability	AHERA assessment category (1-7, X, None)	Recorded locations of material for each assessment category	Response actions taken/ renovations/other comments
ID number	Material description						
W2501 W2502 W2503 W2504 W2505	Exterior space ceilings	TSI (Surf.) Misc.	Assumed Yes (No)	F NF X		Overhang ceilings - entire site.	
W3203 W3204	HVAC exhaust vent pipe joint tape	(TSI) Surf. Misc.	Assumed (Yes) No	F NF X		Boiler room, not observed	
		TSI Surf. Misc.	Assumed Yes No	F NF X			
		TSI Surf. Misc.	Assumed Yes No	F NF X			
		TSI Surf. Misc.	Assumed Yes No	F NF X			
		TSI Surf. Misc.	Assumed Yes No	F NF X			

Information abstracted by Inspector Date ____

Friability: F = friable, NF = nonfriable, X = not applicable (material is non-ACBM)

AHERA assessment category: 1 = Damaged or significantly damaged TSI ACBM, 2 = Damaged friable surfacing ACBM, 3 = Significantly damaged friable surfacing ACBM, 4 = Damaged or significantly damaged friable miscellaneous ACBM, 5 = ACBM with potential for damage, 6 = ACBM with potential for significant damage, 7 = Any remaining friable ACBM or friable suspected ACBM, X = not applicable (material is non-ACBM or nonfriable surfacing or miscellaneous material), None = No assessment category provided in original inspection.

Sample Reinspection Form 1. Original AHERA Inspection Information Abstracted from the Management Plan

School Webster ES Building C. Date(s) of Original AHERA Inspection ____

Homogeneous sampling areas		Material category	Asbestos content	Friability	AHERA assessment category (1-7, X, None)	Recorded locations of material for each assessment category	Response actions taken/ renovations/other comments
ID number	Material description						
7806	stucco	TSI	Assumed	F		Ext. walls	S/W
7807		Surf.	Yes	NF			S/E
7808		Misc.	No	X		3901 sq. ft	N/E
7809		TSI	Assumed	F			N/W.
W.2403		Surf.	Yes	NF			
		Misc.	No	X			
7810	window putty	TSI	Assumed	F		Ext. windows 3600 Li. Ft.	S/W.
		Surf.	Yes	NF			
		Misc.	No	X			
7811	12" random pinhole c.t. glue	TSI	Assumed	F		ESL. RM 600 sq. ft	ESL. CTR
		Surf.	Yes	NF			
		Misc.	No	X			
7812	Rough plaster	TSI	Assumed	F		Boys, Girls, custodian rooms elec. rm 950 sq. ft.	Custodian rm N/W
7813		Surf.	Yes	NF			Boys N/W.
7814		Misc.	No	X			Girls NO. CTR.
7804	gray HVAC DUCT TAPE	TSI	Assumed	F		1st FL closets	
bldg A		Surf.	Yes	NF			
		Misc.	No	X		4 ea.	

Information abstracted by ____ Date ____

Friability: F = friable, NF = nonfriable, X = not applicable (material is non-ACBM)

AHERA assessment category: 1 = Damaged or significantly damaged TSI ACBM, 2 = Damaged friable surfacing ACBM, 3 = Significantly damaged friable surfacing ACBM, 4 = Damaged or significantly damaged friable miscellaneous ACBM, 5 = ACBM with potential for damage, 6 = ACBM with potential for significant damage, 7 = Any remaining friable ACBM or friable suspected ACBM, X = not applicable (material is non-ACBM or nonfriable surfacing or miscellaneous material), None = No assessment category provided in original inspection.

Sample Reinspection Form 1. Original AHERA Inspection Information Abstracted from the Management Plan

School Webster E.S Building C Date(s) of Original AHERA Inspection 2-27-07

Homogeneous sampling areas: ID number	Homogeneous sampling areas: Material description	Material category	Asbestos content	Friability	AHERA assessment category (1-7, X, None)	Recorded locations of material for each assessment category	Response actions taken/ renovations/other comments
7815 7816 7817	Drywall joint compound	TSI Surf. Misc.	Assumed Yes No	F NF X	See sample W1001 W1003 W1103 W1107	Rm 13-16 dividing walls, Rm 16A walls & ceilings Doors, bulk elec. rm & crawl space ceilings. 3,100 sq. ft	Rm 13 S/W. Rm 15 S/E Rm 16 N/W.
7818	Drywall	TSI Surf. Misc.	Assumed Yes No	F NF X		HTR closet 1-4 700 sq. ft.	HTR closet 1 ~~S/W~~ S/W
7819 7820 7821	Drywall J.C.	TSI Surf. Misc.	Assumed Yes No	F NF X			HTR closet 1 S/W HTR closet 2 S/E HTR closet 4 S/W
7799 Bldg A	12X12 Light & green floor tile & glue	TSI Surf. Misc.	Assumed Yes No	F NF X		13, 14, 15, 16 800 sq. ft.	
7800 Bldg A	4in dusk green cove base & glue	TSI Surf. Misc.	Assumed Yes No	F NF X		Rms 13, 14, 15, 16 240' L	
7802 Bldg A	4in gray cove base & glue	TSI Surf. Misc.	Assumed Yes No	F NF X		ESC Rm (16A) 70' L	
7803	2XX pissued					Rms 13-16. 3800 sq. ft.	

Information abstracted by C. Pool Date

Friability: F = friable, NF = nonfriable, X = not applicable (material is non-ACBM)

AHERA assessment category: 1 = Damaged or significantly damaged TSI ACBM, 2 = Damaged friable surfacing ACBM, 3 = Significantly damaged friable surfacing ACBM, 4 = Damaged or significantly damaged friable miscellaneous ACBM, 5 = ACBM with potential for damage, 6 = ACBM with potential for significant damage, 7 = Any remaining friable ACBM or friable suspected ACBM, X = not applicable (material is non-ACBM or nonfriable surfacing or miscellaneous material), None = No assessment category provided in original inspection.

Flexible collars in HTR closets consist of vinyl material (4 ea)

Sample Reinspection Form 1. Original AHERA Inspection Information Abstracted from the Management Plan

School: Webster E.S. Building: C Date(s) of Original AHERA Inspection: ____

Homogeneous sampling areas: ID number	Homogeneous sampling areas: Material description	Material category	Asbestos content	Friability	AHERA assessment category (1-7, X, None)	Recorded locations of material for each assessment category	Response actions taken/ renovations/other comments
W0801	12" grey floor tile w/ brown streaks & mastic	TSI / Surf. / (Misc.)	Assumed / (Yes) / No	F / NF / X		BSL Classroom observed under carpet. 660 sq. ft.	Also observed under carpet in Rm 15 800 sq. ft.
W1001 W1003	Gypsum wall/joint compound Take one map	TSI / (Surf.) / Misc.	Assumed / Yes / No	F / NF / X			Re[illegible] W.
W1103 W1105	Gypsum ceiling check for mastic	TSI / Surf. / (Misc.)	Assumed / Yes / No	F / NF / X			
W1201	12" random pinhole ceiling tile (New) check for mastic	TSI / Surf. / (Misc.)	Assumed / Yes / No	F / NF / X		Replacement in E.S.L. classroom. 20 sq. ft.	
W1301 W1302 W1303	12" random pinhole ceiling tile check mastic	TSI / Surf. / (Misc.)	Assumed / Yes / (No)	F / NF / X		E.S.L. Classroom 560 sq. ft.	
	Mastic associated w/ pinhole ceiling tile (sampled)	TSI / Surf. / (Misc.)	Assumed / Yes / (No)	F / NF / X		BSL classroom 560 sq. ft.	

Information abstracted by: Inspector Date: ____

Friability: F = friable, NF = nonfriable, X = not applicable (material is non-ACBM)

AHERA assessment category: 1 = Damaged or significantly damaged TSI ACBM, 2 = Damaged friable surfacing ACBM, 3 = Significantly damaged friable surfacing ACBM, 4 = Damaged or significantly damaged friable miscellaneous ACBM, 5 = ACBM with potential for damage, 6 = ACBM with potential for significant damage, 7 = Any remaining friable ACBM or friable suspected ACBM, X = not applicable (material is non-ACBM or nonfriable surfacing or miscellaneous material), None = No assessment category provided in original inspection.

ample Reinspection Form 1. Original AHERA Inspection Information Abstracted from the Management Plan

chool Webster E.S. Building C Date(s) of Original AHERA Inspection ____

Homogeneous sampling areas		Material category	Asbestos content	Friability	AHERA assessment category (1-7, X, None)	Recorded locations of material for each assessment category	Response actions taken/ renovations/other comments
ID number	Material description						
W2403	exterior stucco wall ~~Sample add. accordingly~~	TSI (Surf.) Misc.	Assumed Yes No	F NF X			
W2501 farm W2505	Exterior stucco ceiling	TSI Surf. Misc.	Assumed Yes No	F NF X		overhang ceiling perted entire site 3500 SF	
Assumed	chalkboards	TSI Surf. Misc.	Assumed Yes No	F NF X		RMS 13, 14, 15, 16 & 16A (ESL) (9 ea)	NOS original chalkboards, (tryl/erase boards)
Assumed	HTR units	TSI Surf. Misc.	Assumed Yes No	F NF X		RMS 13, 14, 15 16, & 16A ESL @ 5 ea.	
Assumed	gravel roof core	TSI Surf. Misc.	Assumed Yes No	F NF X		ROOF 4750.55 ft	
Assumed	ROOF MASTIC	TSI Surf. Misc.	Assumed Yes No	F NF X		ROOF penetrations 50 sq ft ~~4750 sq ft~~	

Inspector Information abstracted by ____ Date ____

Friability: F = friable, NF = nonfriable, X = not applicable (material is non-ACBM)

AHERA assessment category: 1 = Damaged or significantly damaged TSI ACBM, 2 = Damaged friable surfacing ACBM, 3 = Significantly damaged friable surfacing ACBM, 4 = Damaged or significantly damaged friable miscellaneous ACBM, 5 = ACBM with potential for damage, 6 = ACBM with potential for significant damage, 7 = Any remaining friable ACBM or friable suspected ACBM, X = not applicable (material is non-ACBM or nonfriable surfacing or miscellaneous material), None = No assessment category provided in original inspection.

CTL ENVIRONMENTAL SERVICES
FIELD BULK SAMPLE LIST

CLIENT: SMMUSD (Admin) Bldg D
PROJECT NO.: 107-0008
PROJECT NAME: Webster E.S.

Technician: V. Sanchez
Date: 2-28-07
Page: 1 of 3

PHOTO #	MATERIAL	SAMPLE #	SAMPLE LOCATION	MATERIAL LOCATION	EST. QTY.	F	D
	STUCCO	7889	N/E	ext. walls	2950 sq. ft	N	N
		7890	NO. CTR.				
		7891	N/W				
		7892	S/W				
		7893	S/E				
	rough plaster ceiling	7894	~~[illegible]~~ HTR closet S/E	HTR closet & elec. rm	700 sq. ft	N	N
		7895	Elec rm S/E				
		7896	Elec rm N/E				
	9" duct tan w/ brown putty & mastic	W0401 W0501	POS.	elec rm 4	40 sq. ft	N	N
L	Smooth plaster	W2302 W2304	removed				
✓		W2201 W2204					
	4" brown cove base & glue	7897	elec rm N/E	elec. rm 204 ft	204 ft	N	N

CTL ENVIRONMENTAL SERVICES
FIELD BULK SAMPLE LIST

(Admin) Bldg D

CLIENT: SMMUSD
PROJECT NO.: 1070008
PROJECT NAME: Webster ES

Technician: V. Sanchez
Date: 2-28-07
Page: 2 of 2

PHOTO #	MATERIAL	SAMPLE #	SAMPLE LOCATION	MATERIAL LOCATION	EST. QTY.	F	D
	window putty	7898	NORTH CTR	ext windows	200 LI.FT	N	Y
	Drywall	7899	nurses office N/W	All dividing walls (except elec. rm & HTR CLST)	3800 sq. ft	N	N
	Drywall Joint comp	7900					
		7901	main office S/W				
		7902	Hall N/E				
		7903	workrm S/E				
		7904	workrm RR's entrance				
	4 in grey cove base adhe	7802	bldg A	nurses office, audio testing rm, workrm, principal office, main office & Hall	280 LI.FT	N	N
	HVAC duct tape	7804	Bldg A.	HTR RM	5 sq.ft.	N	N
	2x4 Fissured ceiling panel	7803	bldg A	nurses office, audiotesting rm, workrm, main office, principal office, Hall.	1800 sq. FT.	Y	N
	HTR unit	Assumed		HTR RM	1 ea	N	N
	Gravel roof cove	Assumed		ROOF	1800 sq.ft		N
	ROOFMASTIC	Assumed		ROOF penetration	25 sq.ft	N	N

CTL ENVIRONMENTAL SERVICES
FIELD BULK SAMPLE LIST

CLIENT: SMMUSD
PROJECT NO.: 1070008
PROJECT NAME: Webster E.S.

Admin Bldg D

Technician: V. Sanchez
Date: 2-28-07
Page: 3 of 3

PHOTO #	MATERIAL	SAMPLE #	SAMPLE LOCATION	MATERIAL LOCATION	EST. QTY.	F	D
	~~7999~~ 12x12 Light green vinyl tile w/ blk	7999	bldg D.	principal office, main office, nurses office, workroom, hall	1200 sq.ft	N	N.

ample Reinspection Form 1. Original AHERA Inspection Information Abstracted from the Management Plan

chool Webster M.S. Building D Date(s) of Original AHERA Inspection ____

Homogeneous sampling areas		Material category	Asbestos content	Friability	AHERA assessment category (1-7, X, None)	Recorded locations of material for each assessment category	Response actions taken/ renovations/other comments
ID number	Material description						
W1502 W1603	12" Straight pattern ceiling tile & Mastic	TSI Surf. Misc.	Assumed Yes No	F NF X		Removed.	
W1701 W1702 W1703	12" random pattern ceiling tile (Old) Check for mastic	TSI Surf. Misc.	Assumed Yes No	F NF X		Copier room Non-observed throughout bldg.	
W2005	Rough plaster ceiling Sample accordingly	TSI Surf. Misc.	Assumed Yes No	F NF X		Bathroom Removed replaced with Drywall	
W2201 W2204	Smooth plaster ceiling Sample accordingly	TSI Surf. Misc.	Assumed Yes No	F NF X		Bathroom. removed replaced with drywall.	
~~W2300~~ W2501 thru W2505	Smooth plaster exterior stucco overhang	TSI Surf. Misc.	Assumed Yes No	F NF X		All exterior overhangs	
		TSI Surf. Misc.	Assumed Yes No	F NF X			

Information abstracted by Inspector Date ____

Friability: F = friable, NF = nonfriable, X = not applicable (material is non-ACBM)

AHERA assessment category: 1 = Damaged or significantly damaged TSI ACBM, 2 = Damaged friable surfacing ACBM, 3 = Significantly damaged friable surfacing ACBM, 4 = Damaged or significantly damaged friable miscellaneous ACBM, 5 = ACBM with potential for damage, 6 = ACBM with potential for significant damage, 7 = Any remaining friable ACBM or friable suspected ACBM, X = not applicable (material is non-ACBM or nonfriable surfacing or miscellaneous material), None = No assessment category provided in original inspection.

ample Reinspection Form 1. Original AHERA Inspection Information Abstracted from the Management Plan

chool Webster 8.S. Building D Date(s) of Original AHERA Inspection

Homogeneous sampling areas		Material category	Asbestos content	Friability	AHERA assessment category (1-7, X, None)	Recorded locations of material for each assessment category	Response actions taken/ renovations/other comments
ID number	Material description						
W0401	9" dk. tan w/ brown streaks floor tile & mastic	TSI Surf. (Misc.)	Assumed (Yes) No	F NF X		Teachers work room, removed	
W0501	9" tan w/ brown streaks floor tile & mastic	TSI Surf. (Misc.)	Assumed (Yes) No	F NF X		Copier room, removed	
W1102	gypsum ceilings check for ~~sl.~~ ~~amp.~~ ~~Sample board if necessary~~	TSI Surf. (Misc.)	Assumed Yes No	F NF X		Copier room ~~dark?~~ Removed	
W2005	Rough plaster ceilings ~~Sample accordingly~~	TSI (Surf.) ~~Misc.~~	Assumed Yes No	F NF X		Removed	
~~W2204~~	~~smooth plaster ceilings~~ ~~Sample accordingly~~	~~TSI (Surf.) Misc.~~	~~Assumed Yes No~~	~~F NF X~~			
W2302	smooth plaster walls ~~Sample accordingly~~	TSI Surf. Misc.	Assumed Yes No	F NF X		Beta room	

Inspector: Date

~~Information abstracted by~~

Friability: F = friable, NF = nonfriable, X = not applicable (material is non-ACBM)

AHERA assessment category: 1 = Damaged or significantly damaged TSI ACBM, 2 = Damaged friable surfacing ACBM, 3 = Significantly damaged friable surfacing ACBM, 4 = Damaged or significantly damaged friable miscellaneous ACBM, 5 = ACBM with potential for damage, 6 = ACBM with potential for significant damage, 7 = Any remaining friable ACBM or friable suspected ACBM, X = not applicable (material is non-ACBM or nonfriable surfacing or miscellaneous material), None = No assessment category provided in original inspection.

ample Reinspection Form 1. Original AHERA Inspection Information Abstracted from the Management Plan

chool Webster E.S Building D Date(s) of Original AHERA Inspection ____

Homogeneous sampling areas		Material category	Asbestos content	Friability	AHERA assessment category (1-7, X, None)	Recorded locations of material for each assessment category	Response actions taken/ renovations/other comments
ID number	Material description						
W2304 ✓	smoote plaster walls Sample accordingly	TSI (Surf.) Misc.	Assumed Yes No	F NF X		removed	
W2901 W2903	HVAC duct insulation Sample more if necessary	TSI Surf. (Misc.)	Assumed Yes (No)	F NF X		Closet, Nurse's office check removed.	
W3201	HVAC exhaust vent pipe joint tape	(TSI) Surf. Misc.	Assumed (Yes) No	F NF X		HVAC room, check removed	
		TSI Surf. Misc.	Assumed Yes No	F NF X			
		TSI Surf. Misc.	Assumed Yes No	F NF X			
		TSI Surf. Misc.	Assumed Yes No	F NF X			

Inspector ~~Information abstracted by~~ ____ Date ____

Friability: F = friable, NF = nonfriable, X = not applicable (material is non-ACBM)

AHERA assessment category: 1 = Damaged or significantly damaged TSI ACBM, 2 = Damaged friable surfacing ACBM, 3 = Significantly damaged friable surfacing ACBM, 4 = Damaged or significantly damaged friable miscellaneous ACBM, 5 = ACBM with potential for damage, 6 = ACBM with potential for significant damage, 7 = Any remaining friable ACBM or friable suspected ACBM, X = not applicable (material is non-ACBM or nonfriable surfacing or miscellaneous material), None = No assessment category provided in original inspection.

FIELD BULK SAMPLE LIST

CLIENT: SMMUSD
PROJECT NO.: 107-0008
PROJECT NAME: Webster. E.S

Bldg E

Technician: V. Sanchez
Date: 2-28-07
Page: 1 of 3

PHOTO #	MATERIAL	SAMPLE #	SAMPLE LOCATION	MATERIAL LOCATION	EST. QTY.	F	D
	STUCCO	7838	N/W	Ext. walls	1950 sq. ft	N	N
		7839	N/E				
		7840	entrance to comp. rm.				
		7841	S/E				
		7842	S/W.				
	Gypsum wall w/ joint comp.	W1005	comp.	office 2 EAST wall computer rm walls	480 sq. ft	N	N
	Drywall	7843	office 2. EAST ctn.				
	Drywall J.C.	7844					
		7845	comp. rm. S/E				
		7846	comp. rm so. ctn				
	window putty	POS. W3001		Ext. windows	800 LI. FT	N	Y

CTL ENVIRONMENTAL SERVICES
FIELD BULK SAMPLE LIST

CLIENT: SMMUSD
PROJECT NO.: 107-0008
PROJECT NAME: Webster E.S

Bldg E

Technician: V. Sanchez
Date: 2-28-07
Page: 2 of 3

PHOTO #	MATERIAL	SAMPLE #	SAMPLE LOCATION	MATERIAL LOCATION	EST. QTY.	F	D
	Rough Plaster, mud walls.	W2104 W2105	~~Library N/W~~	Library & Rm. EAST & WEST walls only (NORTH & SOUTH walls are concrete)	2950 sq. FT	N	N
		7847	Library N/W				
	Rough Plaster walls.	7848	Rm 7 West. CTR				
		7849	Rm 7 S/E				
	Smooth Plaster wall.	W2301		office 1, 2 & HTR closet	2400 sq. FT	N	N
		7850	office 1 N/E				
		7851	office 2 N/W				
		7852	office 2 S/E				
		7853	HTR closet S/W.				
	12" random peghole wall tile glue	ASSUMED		HTR closed	100 sq. FT	N	N
				NOTE: this tile is same as ceiling tile			

CTL ENVIRONMENTAL SERVICES
FIELD BULK SAMPLE LIST

CLIENT: SMUSD
PROJECT NO.: 107-0008
PROJECT NAME: Webster ES

Bldg E

Technician: V. Sanchez
Date: 3-28-07
Page: 3 of 3

PHOTO #	MATERIAL	SAMPLE #	SAMPLE LOCATION	MATERIAL LOCATION	EST. QTY.	F	D
	carpet glue	7854	RM 7 CTR.	RM 7.	900 sq. ft.	N	N
	Brown flr tile & MASTIC	7855	RM 7 CTR	RM 7 under carpet.	900 sq. ft	N	N
	12"x12 gray speckled flr tile	7856	office 2 s/w.	office 1 & 2	700 sq. ft	N	N
	12x12 light green flr tile & glue	7995	bldg A	RM 7	250 sq. ft	N	N
	4 in dark green coveburse & glue	7800	bldg A	Library, office 1, 2, computer rm	400 lin. ft.	N	N
	4 in grey coveburse & glue	7802	bldg A	RM 7	80 lin ft	N	N
	HVAC DUCT TAPE	7804	bldg A	HTR CLOSET	2 sq. ft	N	N
	2x4 FISSURED ceiling panel	7803	bldg A	Library RM 7	3000 sq. ft	N	N
	HTR VENT.	ASSUMED		HTR CLST	1 ea	N	N
	Gravel ROOF COVE	ASSUMED		ROOF	3400 sq. ft	N	N
	ROOF MASTIC	ASSUMED		ROOF penetration	20 sq. ft	N	N
	chalkboard.	ASSUMED	(new hard dry ERASE)	RM 7	2 ea	N	N

ample Reinspection Form 1. Original AHERA Inspection Information Abstracted from the Management Plan

chool Webster ES. Building E Date(s) of Original AHERA Inspection ____

Homogeneous sampling areas		Material category	Asbestos content	Friability	AHERA assessment category (1-7, X, None)	Recorded locations of material for each assessment category	Response actions taken/ renovations/other comments
ID number	Material description						
W1005 ✓	Gypsum wall/ Joint compound Sample accordingly	TSI Surf. Misc.	Assumed Yes No	F NF X			
W1203	12" random pattern ceiling tile Check for asbestos	TSI Surf. Misc.	Assumed Yes No	F NF X		Library office 1 & 2 & computer room and HTR CRST.	Library room & RM 7 above ceiling panels. (material is nailed on)
W2104 ✓ W2105	Rough plaster Walls Sample accordingly	TSI Surf. Misc.	Assumed Yes No	F NF X			
W2301 ✓	Smooth plaster wall Sample accordingly	TSI Surf. Misc.	Assumed Yes No	F NF X			
W2501 thru W2505 ✓	Exterior stucco ceiling	TSI Surf. Misc.	Assumed Yes No	F NF X		Overhang ceilings entire site	
W3001 W3001 ✓	Window putty	TSI Surf. Misc.	Assumed Yes No	F NF X			

Inspector: Information abstracted by ____ Date ____

Friability: F = friable, NF = nonfriable, X = not applicable (material is non-ACBM)

AHERA assessment category: 1 = Damaged or significantly damaged TSI ACBM, 2 = Damaged friable surfacing ACBM, 3 = Significantly damaged friable surfacing ACBM, 4 = Damaged or significantly damaged friable miscellaneous ACBM, 5 = ACBM with potential for damage, 6 = ACBM with potential for significant damage, 7 = Any remaining friable ACBM or friable suspected ACBM, X = not applicable (material is non-ACBM or nonfriable surfacing or miscellaneous material), None = No assessment category provided in original inspection.

CTL ENVIRONMENTAL SERVICES
FIELD BULK SAMPLE LIST

CLIENT: SMMUSD
PROJECT NO.: 107-0008
PROJECT NAME: Webster E.S.

Bldg F

Technician: V. Sanchez
Date: 2-28-07
Page: 1 of 3

PHOTO #	MATERIAL	SAMPLE #	SAMPLE LOCATION	MATERIAL LOCATION	EST. QTY.	F	D
	STUCCO	7857	N/E	exterior walls	2200 sq.ft.	N	N
		7858	S/E				
		7859	N/W				
		7860	S/W				
		7861	WEST CTR.				
	Rough Plaster walls	W2102 W2106	(see samples)	classrooms, Teachers closet & mechanical rm	2500 sq.ft	N	N
		W2107 7866	RM 9 N/W			N	N
		7867	mech rm. NE. ctn			N	N
	window putty	POS. W3003		ext. windows			
	smooth Plaster ceiling	W2203 [redacted]		Boys RR's & Girls RR's ceilings	500 sq.ft	N	N
		7862	Boys N/W				
		7863	Girls N/W				

CTL ENVIRONMENTAL SERVICES
FIELD BULK SAMPLE LIST

CLIENT: SMMUSD
PROJECT NO.: 107-0008
PROJECT NAME: Webster ES

Bldg F

Technician: V. Sanchez
Date: 2-28-07
Page: 2 of 3

PHOTO #	MATERIAL	SAMPLE #	SAMPLE LOCATION	MATERIAL LOCATION	EST. QTY.	F	D
	Smooth Plaster wall	02303		Boys & Girl RRs walls	950 sq. ft	N	N
		7864	Girls NO. CTR				
		7865	Boys. S/E				
	Brown flr tile & mastic	7868	RM 10 CTR	Room 9 & 10 under carpet	1600 sq. ft		
	12" brown peg tile & glue	7869	RM 9 SO. CTR.	RM 8, 9, 10 north & south perimeter mud residual ceiling tiles	700 sq. ft	X	X
	drywall	7870	RM 9. CTR.	RM 8 & 9, 10, north & south perimeter ceiling mud. Residual drywall	700 sq. ft	N	N.
	NOTE: ceiling tiles & drywall were removed previously sampled remaining materials. located above.						
	ceiling panels (2x4 Disturbed)						
	12x12 Light green flr tile & glue	7799	bldg A.	RMS 8, 9, 10 [redacted]	750 sq. ft	N	N
	4in. dark green cove base & glue	7800	bldg A	RMS 8, 9, 10 carpeted area.	240 LF	N	N
	4in gray cove base & glue	7802	bldg A	RM 8, 9, 10 Tiled area	804 LF	N	N
	HVAC duct tape	784	bldg A	mechanical	5 sq. ft	N	N

CTL ENVIRONMENTAL SERVICES
FIELD BULK SAMPLE LIST

CLIENT: SMHUSD
PROJECT NO.: 1007-008
PROJECT NAME: Webster E.S.

Bldg F

Technician: V. Sandoz
Date: 2-28-07
Page: 3 of 3

PHOTO #	MATERIAL	SAMPLE #	SAMPLE LOCATION	MATERIAL LOCATION	EST. QTY.	F	D
	carpet glue	7854 7804	Bldg E bldg A.	RMS 8, 9, 10	2700 sq.ft	N	N
	2x4 fissured ceiling panel	7803	bldg A	RM 8, 9, 10	~~[illegible]~~ 3400 sq.ft	Y	N
	HTR unit	Assumed		mechrm	1 ea.	N	N
	Gravel roof core.	Assumed		ROOF	4200 sq.ft	N	N
	ROOF MASTIC	Assumed		ROOF penetrations	20 sq.ft	N	N
	chalkboards dry/erase	Assumed	dry/erase.	RMS 8, 9, 10	6 ea		

ample Reinspection Form 1. Original AHERA Inspection Information Abstracted from the Management Plan

Date(s) of Original AHERA Inspection _____

chool Webster ES Building F

Homogeneous sampling areas		Material category	Asbestos content	Friability	AHERA assessment category (1-7, X, None)	Recorded locations of material for each assessment category	Response actions taken/ renovations/other comments
ID number	Material description						
W2102 W2106 W2107	Rough plaster walls Simple add. if necessary	TSI Surf. Misc.	Assumed Yes No	F NF X		Heater room Jan room & classrooms.	
W2203	Smooth plaster ceilings	TSI Surf. Misc.	Assumed Yes No	F NF X		Boys RR	
W2303	Smooth plaster walls	TSI Surf. Misc.	Assumed Yes No	F NF X		Boys RR	
W3003	Window putty	TSI Surf. Misc.	Assumed Yes No	F NF X			
		TSI Surf. Misc.	Assumed Yes No	F NF X			
		TSI Surf. Misc.	Assumed Yes No	F NF X			

Information abstracted by Inspector Date _____

Friability: F = friable, NF = nonfriable, X = not applicable (material is non-ACBM)

AHERA assessment category: 1 = Damaged or significantly damaged TSI ACBM, 2 = Damaged friable surfacing ACBM, 3 = Significantly damaged friable surfacing ACBM, 4 = Damaged or significantly damaged friable miscellaneous ACBM, 5 = ACBM with potential for damage, 6 = ACBM with potential for significant damage, 7 = Any remaining friable ACBM or friable suspected ACBM, X = not applicable (material is non-ACBM or nonfriable surfacing or miscellaneous material), None = No assessment category provided in original inspection.

CTL ENVIRONMENTAL SERVICES
FIELD BULK SAMPLE LIST

CLIENT: SMMUSD
PROJECT NO.: 1070008
PROJECT NAME: Webster E.S

Auditorium Bldg 6

Technician: V. Sanchez
Date: 2-28-07
Page: ~~1~~ 2 of 4

PHOTO #	MATERIAL	SAMPLE #	SAMPLE LOCATION	MATERIAL LOCATION	EST. QTY.	F	D
	Rough Plaster ceiling	W2001		auditorium, kitchen, storage room, teachers work rm, mech rm.			
		W2002					
		W2003					
		W2004					
		7912	mech rm. N/W.				
	Rough Plaster walls	W2103		storage rm, mechanical rm	1800 sq.ft	N	N
		7913	mech rm NW. CTR.				
		7914	mech rm S/E				
		7915	storage rm N/W				
		7916	storage rm S/E				
	SMOOTH PLASTER ceiling	W2202		teachers dining rm, & RR'S	1500 sq.ft	N	N
		W2205					
		7917	teacher dining rm N/E				
		7918	teacher dining rm S/W.				
		7919	Boys RR'S N/W.				

CTL ENVIRONMENTAL SERVICES
FIELD BULK SAMPLE LIST

CLIENT: S.MMUSD
PROJECT NO.: 1070008
PROJECT NAME: Webster E.S.

(And.) Bldg G

Technician: V-Sucher
Date: 2-28-07
Page: 2 of 4

PHOTO #	MATERIAL	SAMPLE #	SAMPLE LOCATION	MATERIAL LOCATION	EST. QTY.	F	D
	STUCO	7905	N/E	EXT. walls	4500 ~~2300~~	N	N
		7906	N/W				
		7907	SO. CTR				
		7908	S/E				
		7909	S/W.				
	window putty	7910	S/W.	EXT. windows on west & south sides	300 LIN FT	N	N
	grey with black dots floorsheeting	7911	kitchen so. ctr	kitchen	1200 sq FT	N	N
	OFF white PLY tile w/ MASTIC	0301	POS.	Auditorium	2500 sq FT	N	N.
	gr dark tan. PLY tile w/ MASTIC	W201	POS.	Janitors rm	80 sq FT	N	Yes

FIELD BULK SAMPLE LIST

CLIENT: SMMUSD
PROJECT NO.: 207-0008
PROJECT NAME: Webster E-S

And.
Bldg G

Technician: V. Sanchez
Date: 2-28-07
Page: 3 of 4

PHOTO #	MATERIAL	SAMPLE #	SAMPLE LOCATION	MATERIAL LOCATION	EST. QTY.	F	D
	smooth Plaster walls	7920	teacher dining rm s/w.	teachers dining rm, kitchen teachers workrm, Auditorium, RR's	8500 sq.ft	N	N
		7921	kitchen. so. ctr.	kiln rm. stage area			
		7922	boys RR's s/E				
		7923	stage area N/W				
		7924	Auditorium EAST ctr.				
		7925	kiln rm N/W.				
		W2305					
	dry wall	7926	storage area ctr.	storage area (NO TOUCH warned)	60 sq.ft.	N	N
	4in. lightgreen cove base & glue	7927	dining rm N/E	dining rm	90 L.F.	N	N
	12x12 Pinkish with dark spots (Flor tile)	7928	dining rm. EAST CTR	dining rm, 76	700 sq.ft	N	N
	hot brick	7929	kiln rm N/E	kiln rm kiln unit	30 sq.ft	N	N

CTL ENVIRONMENTAL SERVICES
FIELD BULK SAMPLE LIST

CLIENT: SMMUSD
PROJECT NO.: 107-0008
PROJECT NAME: Webster

Bldg 6

Technician: V-Sanchez
Date: 2-28-07
Page: 4 of 4

PHOTO #	MATERIAL	SAMPLE #	SAMPLE LOCATION	MATERIAL LOCATION	EST. QTY.	F	D
	gm brown covebase & glue	7930	Auditorium West ctr	Auditorium	170 Li. Ft	N	N
	Gravel roof core	Assumed		ROOF	4900 sq ft	N	N
	ROOF MASTIC	Assumed		ROOF Deadwater	50 sq ft	N	N
	HTR unit	Assumed		mech rm	1 ea	N	N

ımple Reinspection Form 1. Original AHERA Inspection Information Abstracted from the Management Plan

hool Webster O.S. Building 6 Date(s) of Original AHERA Inspection ____

Homogeneous sampling areas		Material category	Asbestos content	Friability	AHERA assessment category (1-7, X, None)	Recorded locations of material for each assessment category	Response actions taken/ renovations/other comments
ID number	Material description						
W0101	9" tan floor tile & mastic Mastic - Negative	TSI Surf. Misc.	Assumed Yes No	F NF X		Kitchen ✓ 3000'SF	
W201	9" dark tan floor tile & mastic	TSI Surf. Misc.	Assumed Yes No	F NF X		Storage Janitor closet ✓ 80.35 FT.	
WB301	12" off white floor tile & mastic Mastic=ND	TSI Surf. Misc.	Assumed Yes No	F NF X		Auditorium ✓	
W1501 W1602	12" stright pegboard ceiling tile & mastic	TSI Surf. Misc.	Assumed Yes No	F NF X		Kitchen, S/E storage area teachers workroom ✓ in inner.	
W1801 W1802 W1803 ~~W1701~~ ~~W1602, W1603~~	12" fissured ceiling tile & ~~mastic~~	TSI Surf. Misc.	Assumed Yes No	F NF X		Auditorium ✓	
W1901 W1902 W1903	Mastic associated w/ 12" fissured ceiling tile	TSI Surf. Misc.	Assumed Yes No	F NF X		Auditorium ✓	

Inspector: Information abstracted by ____ Date ____

Friability: F = friable, NF = nonfriable, X = not applicable (material is non-ACBM)

AHERA assessment category: 1 = Damaged or significantly damaged TSI ACBM, 2 = Damaged friable surfacing ACBM, 3 = Significantly damaged friable surfacing ACBM, 4 = Damaged or significantly damaged friable miscellaneous ACBM, 5 = ACBM with potential for damage, 6 = ACBM with potential for significant damage, 7 = Any remaining friable ACBM or friable suspected ACBM, X = not applicable (material is non-ACBM or nonfriable surfacing or miscellaneous material), None = No assessment category provided in original inspection.

ample Reinspection Form 1. Original AHERA Inspection Information Abstracted from the Management Plan

School: Webster E.S. Building: 6 Date(s) of Original AHERA Inspection: ____

Homogeneous sampling areas: ID number	Homogeneous sampling areas: Material description	Material category	Asbestos content	Friability	AHERA assessment category (1-7, X, None)	Recorded locations of material for each assessment category	Response actions taken/ renovations/other comments
W2001 W2002 W2003 W2004	Rough plaster ceiling Take/remove	TSI (Surf.) Misc.	Assumed Yes No	F NF X	1	Auditorium & kitchen storage rm teachers workroom	kilnroom mechroom
W2103	Rough plaster walls Take add.	TSI (Surf.) Misc.	Assumed Yes No	F NF X	4	storage rm. mechrm.	
W2202 W2205	Smooth plaster ceiling Take add.	TSI (Surf.) Misc.	Assumed Yes No	F NF X	3	teachers dining rm RR's	
W2305	Smooth plaster walls Take add.	TSI Surf. Misc.	Assumed Yes No	F NF X	6.	teachers dining rm kitchen, teachers workrm RR's, Auditorium kilnrm	
W2406 W2407	Exterior wall Stucco Take / remove	TSI (Surf.) Misc.	Assumed Yes No	F NF X			
W2501 W2502 W2503 W2504 W2505	Exterior Stucco on overhangs	TSI (Surf.) Misc.	Assumed Yes (No)	F NF X		Overhang ceilings in all site	

Information abstracted by: Inspector. Date: ____

Friability: F = friable, NF = nonfriable, X = not applicable (material is non-ACBM)

AHERA assessment category: 1 = Damaged or significantly damaged TSI ACBM, 2 = Damaged friable surfacing ACBM, 3 = Significantly damaged friable surfacing ACBM, 4 = Damaged or significantly damaged friable miscellaneous ACBM, 5 = ACBM with potential for damage, 6 = ACBM with potential for significant damage, 7 = Any remaining friable ACBM or friable suspected ACBM, X = not applicable (material is non-ACBM or nonfriable surfacing or miscellaneous material), None = No assessment category provided in original inspection.

ample Reinspection Form 1. Original AHERA Inspection Information Abstracted from the Management Plan

chool Webster E.S. Building 6 Date(s) of Original AHERA Inspection ____

Homogeneous sampling areas		Material category	Asbestos content	Friability	AHERA assessment category (1-7, X, None)	Recorded locations of material for each assessment category	Response actions taken/ renovations/other comments
ID number	Material description						
W3202	HVAC exhaust vent pipe joint tape	(TSI) Surf. Misc.	Assumed Yes (No)	F NF X		Boiler room ✓	
W3301	pipe insulation	(TSI) Surf. Misc.	Assumed Yes (No)	F NF X		Outside kitchen ✓	
W3401	pipe fitting insulation	(TSI) Surf. Misc.	Assumed Yes (No)	F NF X		outside kitchen ✓	
		TSI Surf. Misc.	Assumed Yes No	F NF X			
		TSI Surf. Misc.	Assumed Yes No	F NF X			
		TSI Surf. Misc.	Assumed Yes No	F NF X			

Information abstracted by Inspector Date ____

Friability: F = friable, NF = nonfriable, X = not applicable (material is non-ACBM)

AHERA assessment category: 1 = Damaged or significantly damaged TSI ACBM, 2 = Damaged friable surfacing ACBM, 3 = Significantly damaged friable surfacing ACBM, 4 = Damaged or significantly damaged friable miscellaneous ACBM, 5 = ACBM with potential for damage, 6 = ACBM with potential for significant damage, 7 = Any remaining friable ACBM or friable suspected ACBM, X = not applicable (material is non-ACBM or nonfriable surfacing or miscellaneous material), None = No assessment category provided in original inspection.

CTL ENVIRONMENTAL SERVICES
FIELD BULK SAMPLE LIST

CLIENT: SHMUSD
PROJECT NO.: 1070008
PROJECT NAME: Webster ES

Bldg H

Technician: V. Sanchez
Date: 2-28-07
Page: 1 of ___

PHOTO #	MATERIAL	SAMPLE #	SAMPLE LOCATION	MATERIAL LOCATION	EST. QTY.	F	D
	STUCCO	W2404 W2405		exterior walls	4000 sq. ft	N	N
		7871	N.O. EAST				
		7872	SO. CTR				
		7873	a/w.				
	Rough Plaster wall	POS. W2101		Janitor's, electrical rms,	200 sq. ft.	N	N
	Rough Plaster ceiling.	W2001		Janitor's & electrical rm,	800 sq. ft	N	N
		7874	CUSTODIAN RM N/E				
		7875	Elec. RM. SO. CTR				
	12" STRAIGHT Peghole Alcemastic	W1503					
	window putty	7876	North CTR.	Ext wall	2800 Li. ft.	N	Y

CTL ENVIRONMENTAL SERVICES
FIELD BULK SAMPLE LIST

CLIENT: SMMUSD
PROJECT NO.: 107-0008
PROJECT NAME: Webster ES

Bldg H.

Technician: V. Sunder
Date: 2-28-07
Page: 2 of ___

PHOTO #	MATERIAL	SAMPLE #	SAMPLE LOCATION	MATERIAL LOCATION	EST. QTY.	F	D
	Drywall	7877	RM 2 S/W	HTR closets & south side soffits RMS 1-4	950 sq. ft	N	N
	Drywall J.C.	7878					
		7879	RM 4 S/W				
		7880	RM 1 S/W.				
	Smooth Plaster	7881	RM 4 N/W	Classroom 1-4 Boys & Girls RRS	7600 sq. ft	N	N
		7882	RM 2 N/E				
		7883	RM 1 S. CTR				
		7884	Boys RRS N/E				
		7885	Girls RRS S/W				
		7886	RM 3 SO. CTR				
		7887	RM 3 N/W.				
	Brown Floor tile & Mastic	7888	RM 4 CTR	Rooms 1-4 under carpet. 2800 sq. ft	2800 sq. ft	D	N

ample Reinspection Form 1. Original AHERA Inspection Information Abstracted from the Management Plan

:hool Webster E.S. Building H Date(s) of Original AHERA Inspection ____

Homogeneous sampling areas		Material category	Asbestos content	Friability	AHERA assessment category (1-7, X, None)	Recorded locations of material for each assessment category	Response actions taken/ renovations/other comments
ID number	Material description						
W1101 ✓	Gypsum ceiling Checkpr ~~tic~~ Lt. Gry.	TSI (Surf.) Misc.	Assumed Yes No	F NF X		Above ceiling panels RMS, 1-4 NO JOINT compound.	
W1503 ✓ ✓	12" stright pattern ceiling tile & Mastic	TSI Surf. (Misc.)	Assumed Yes (No)	F NF X		Above ceiling panels. RMS 1-4	
W2006 ✓ X	Rough plaster ceilings Sample accordingly	TSI (Surf.) Misc.	Assumed Yes No	F NF X			
W2101 ✓ X	Rough plaster wall	TSI (Surf.) Misc.	Assumed (Yes) No <1%	F NF X			
W2404 W2405 X	Exterior stucco wall Sample accordingly	TSI (Surf.) Misc.	Assumed Yes No	F NF X			
W2501 thru W2505 ✓ X	Exterior ceiling stucco	TSI (Surf.) Misc.	Assumed Yes (No)	F NF X		Overhang ceilings on site	

Inspector: Information abstracted by ____ Date ____

Friability: F = friable, NF = nonfriable, X = not applicable (material is non-ACBM)

AHERA assessment category: 1 = Damaged or significantly damaged TSI ACBM, 2 = Damaged friable surfacing ACBM, 3 = Significantly damaged friable surfacing ACBM, 4 = Damaged or significantly damaged friable miscellaneous ACBM, 5 = ACBM with potential for damage, 6 = ACBM with potential for significant damage, 7 = Any remaining friable ACBM or friable suspected ACBM, X = not applicable (material is non-ACBM or nonfriable surfacing or miscellaneous material), None = No assessment category provided in original inspection.

ample Reinspection Form 1. Original AHERA Inspection Information Abstracted from the Management Plan

chool Webster E.S. Building H Date(s) of Original AHERA Inspection ____

Homogeneous sampling areas		Material category	Asbestos content	Friability	AHERA assessment category (1-7, X, None)	Recorded locations of material for each assessment category	Response actions taken/ renovations/other comments
ID number	Material description						
W2801 W2802 W2803	Sink undercoating	TSI Surf. Misc.	Assumed Yes No	F NF X		classroom 4 Rms 1-4 original sinks 4 ea	
		TSI Surf. Misc.	Assumed Yes No	F NF X			
		TSI Surf. Misc.	Assumed Yes No	F NF X			
		TSI Surf. Misc.	Assumed Yes No	F NF X			
		TSI Surf. Misc.	Assumed Yes No	F NF X			
		TSI Surf. Misc.	Assumed Yes No	F NF X			

Information abstracted by Inspector Date ____

Friability: F = friable, NF = nonfriable, X = not applicable (material is non-ACBM)

AHERA assessment category: 1 = Damaged or significantly damaged TSI ACBM, 2 = Damaged friable surfacing ACBM, 3 = Significantly damaged friable surfacing ACBM, 4 = Damaged or significantly damaged friable miscellaneous ACBM, 5 = ACBM with potential for damage, 6 = ACBM with potential for significant damage, 7 = Any remaining friable ACBM or friable suspected ACBM, X = not applicable (material is non-ACBM or nonfriable surfacing or miscellaneous material), None = No assessment category provided in original inspection.

FIELD BULK SAMPLE LIST

CLIENT: SMMUSD.
PROJECT NO.: 107 0008
PROJECT NAME: WEBSTER. E.S.

Portables 21, 22, 23

Technician: V. Sandoe
Date: 2-28-07
Page: 1 of 1

PHOTO #	MATERIAL	SAMPLE #	SAMPLE LOCATION	MATERIAL LOCATION	EST. QTY.	F	D
	drywall	7931	Portable 23 N/E	Portables 21, 22, 23 behind fiber boards.	3600 sq. ft	N	N.
	2x4 Fissured ceiling panel	7932	portable 21 CTR	portable 21	900 sq. ft	Y	N.
	4 in dark blue caulk-like glue	7933	portable 23 S/W	portables 21, 22, 23	240 L. ft	N	N.
	carpet glue.	7934	portable 23 S/W.	portables 21, 22, 23	3400 sq. ft	N	N.
	12x12 light blue speckled floor tile	7935	portable 22. S/W	portable 22 at S/W & S/E sides	30 sq. ft	N	N
	NOTE: portables 22 & 23 2x4 ceiling panels consist of fiberglass						
	exterior walls consist of wood. roof consists of metal sheeting.						

CTL ENVIRONMENTAL SERVICES
FIELD BULK SAMPLE LIST

CLIENT: SMMUSD
PROJECT NO.: 107-0008
PROJECT NAME: Walkways. Webster. E.S. walkways

Technician: V. Sanchez
Date: 2-28-07
Page: 1 of 1

PHOTO #	MATERIAL	SAMPLE #	SAMPLE LOCATION	MATERIAL LOCATION	EST. QTY.	F	D
	walkway stucco ceiling	W2501 W2		All walkways	4800 sq. ft	N	N
		W2502					
		W2503					
		W2504					
		W2505					
	Gravel roof core	Assumed		walkway roof	5000 sq. ft	N	N
	Roof mastic	Assumed		walkway roof elec. conduit supports,	200 sq. ft	N	N

APPENDIX C

SAMPLE LOCATIONS

APPENDIX D

CTL EMPLOYEE CERTIFICATIONS

State of California
Division of Occupational Safety and Health

Certified Site Surveillance Technician

Victor M Sanchez
Name

Certification No. 08-4347

Expires on 03/20/09

This certification was issued by the Division of Occupational Safety and Health as authorized by Sections 7180 et seq. of the Business and Professions Code.

Certificate Of Completion
Victor Sanchez

Has attended and completed the training course entitled:

Asbestos Contractor/Supervisor Refresher Course

DOSH Course # **CA-015-04**
Certificate # **AASR061507004N**
Training Director: **Alan D. Dages**
Signature:

Start Date: **06/15/07**
Course End Date: **06/15/2007**
Expiration Date: **06/14/08**
Instructor: **Orville Allan**

This course satisfies the education requirements for Asbestos accreditation under the Toxic Substances Control Act, Title II. This course has been approved by the Department of Industrial Relations, Division of Occupational Safety and Health of the State of California

NATEC INTERNATIONAL
1100 Technology Circle – Suite A, Anaheim, CA 92805
www.natecintl.com 714/678-2750 800/969-3228 (FAX) 714/678-2757

Certificate Of Completion
Victor Sanchez

Has attenaea ana completed the training course entitled:

Asbestos Building Inspector Refresher Course

DOSH Course # **CA-015-06**
Certificate # **BIRC083107005N**
Training Director: **Alan D. Dages**
Signature:

Start Date: **08/31/07**
Course End Date: **08/31/2007**
Expiration Date: **08/30/08**
Instructor: **John Vreeland**

This course satisfies the education requirements for Asbestos accreditation under the Toxic Substances Control Act, Title II. This course has been approved by the Department of Industrial Relations, Division of Occupational Safety and Health of the State of California

NATEC INTERNATIONAL
1100 Technology Circle – Suite A, Anaheim, CA 92805
www.natecintl.com 714/678-2750 800/969-3228 (FAX) 714/678-2757

APPENDIX E

PREVIOUS SURVEY RECORD

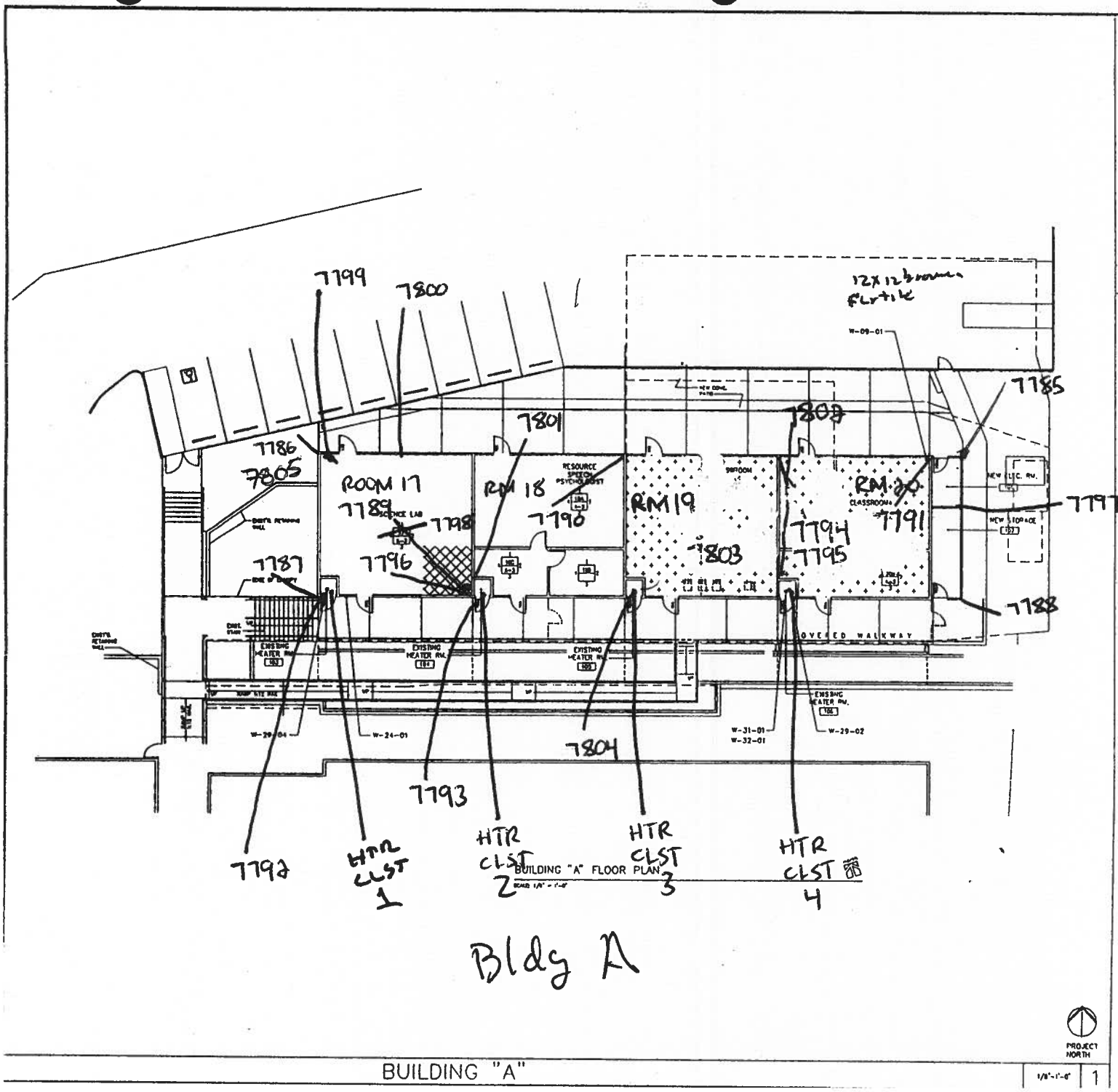

BUILDING "A"

1/8"=1'-0" | 1

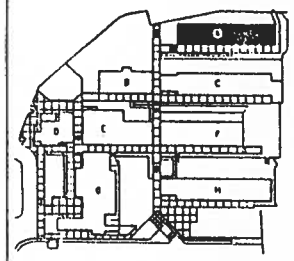

KEY PLAN

NOTES.

1. ASSUMED ASBESTOS CONTAINING CHALKBOARDS LOCATED IN CLASSROOMS.

2. ASBESTOS CONTAINING WINDOW PUTTY LOCATED ON EXTERIOR WINDOW FRAMES.

3. ASBESTOS CONTAINING EXHAUST FLUE JOINT TAPE LOCATED IN MECHANICAL ROOMS.

4. ASSUMED ASBESTOS CONTAINING FLEXIBLE CONNECTORS LOCATED IN MECHANICAL ROOMS.

5. ASSUMED ASBESTOS CONTAINING FIRE DOORS LOCATED IN MECHANICAL ROOMS.

LEGEND

ASBESTOS-CONTAINING 12"X 12" FLOOR TILE AND MASTIC.

ASBESTOS-CONTAINING 9"- 9" FLOOR TILE AND MASTIC

C A P E
ENVIRONMENTAL MANAGEMENT
I N C

20280 S Vermont Ave
Suite 250
Torrance, CA 90502
(310) 532-4500

REVISIONS:

No.	Date	Remarks

PROJECT NAME:

WEBSTER ELEMENTARY SCHOOL

SHEET TITLE:

BUILDING A FLOOR PLAN

JOB NO. 41017.36

DATE ASB-01

DRAWN BY PLANCHANCE

CHECKED BY K.GATES

FILE WBLDG-A

DATE OCT. 93

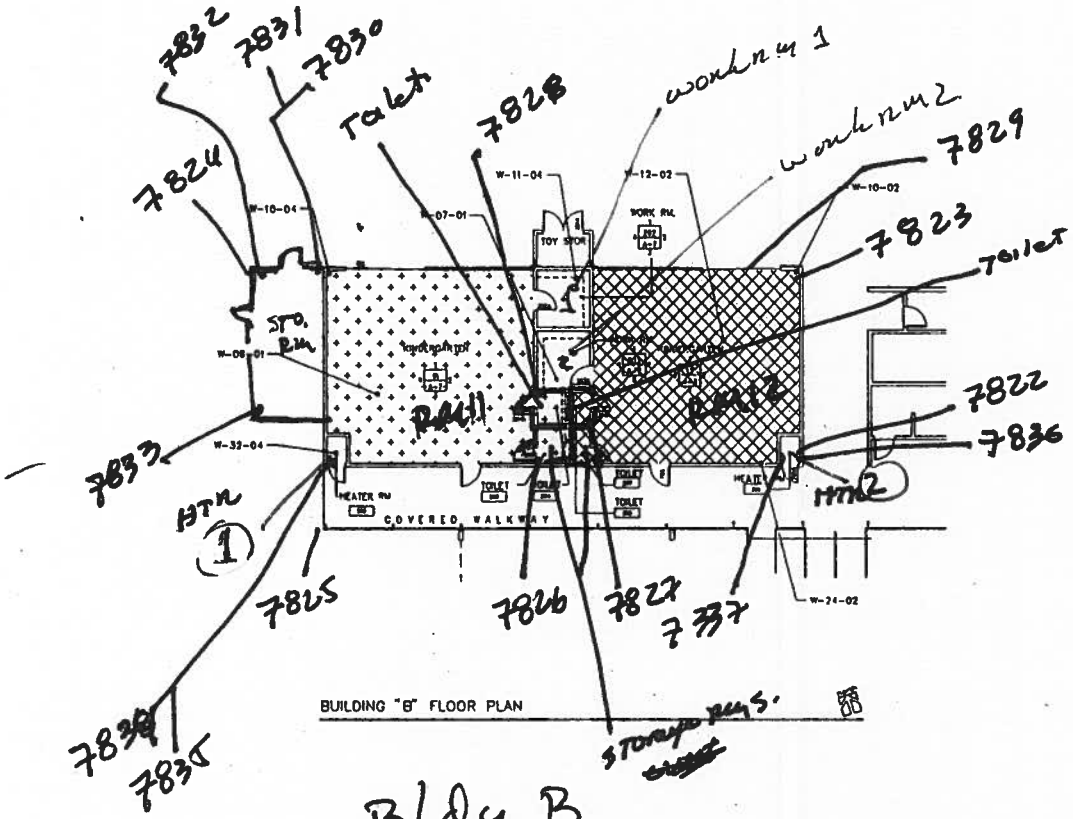

BUILDING "B" FLOOR PLAN

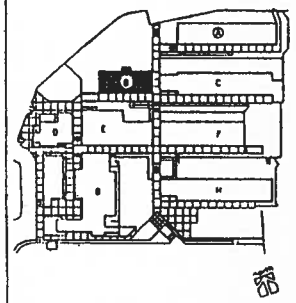

KEY PLAN

NOTES:

1. ASSUMED ASBESTOS CONTAINING CHALKBOARDS LOCATED IN CLASSROOMS.
2. ASBESTOS CONTAINING WINDOW PUTTY LOCATED ON EXTERIOR WINDOW FRAMES.
3. ASBESTOS CONTAINING EXHAUST FLUE JOINT TAPE LOCATED IN BUILDING.
4. ASSUMED ASBESTOS CONTAINING FLEXIBLE CONNECTORS LOCATED IN MECHANICAL ROOMS.
5. ASSUMED ASBESTOS CONTAINING FIRE DOORS LOCATED IN MECHANICAL ROOMS.

LEGEND

ASBESTOS-CONTAINING 12"X 12" FLOOR TILE AND MASTIC.

ASBESTOS-CONTAINING 9", 9" FLOOR TILE AND MASTIC

PROJECT NORTH

BUILDING "B"

1/8"=1'-0" | 1

CAPE ENVIRONMENTAL MANAGEMENT INC
20280 S Vermont Ave.
Suite 250
Torrance, CA 90502
(310) 532-4600

REVISIONS:

No.	Date	Remarks

PROJECT NAME:

WEBSTER ELEMENTARY SCHOOL
SANTA MONICA - MALIBU UNIFIED SCHOOL DISTRICT

SHEET TITLE:

BUILDING B FLOOR PLAN

41017.36

ASB-02 | P.MCKINZIE | K.GATES

WBLDG-B | OCT. 92

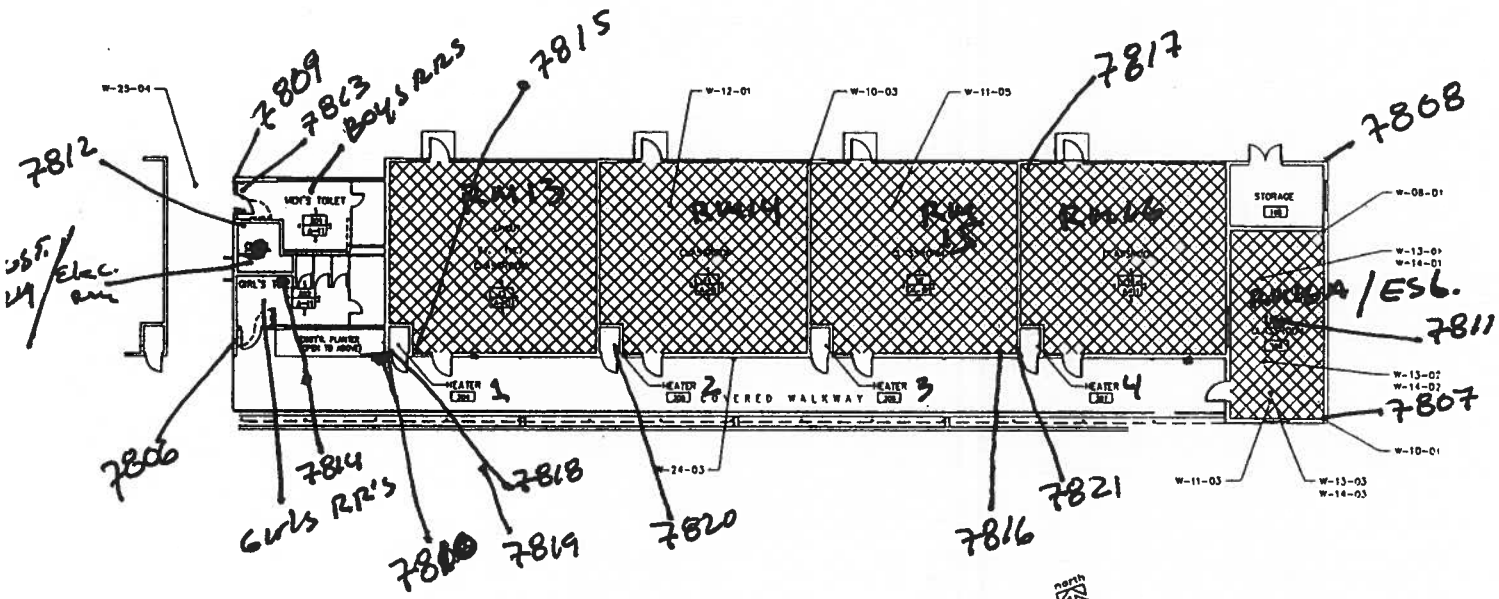

BUILDING "C" FLOOR PLAN

SCALE: 1/8" = 1'-0"

Bldg C.

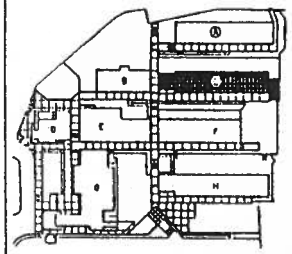

KEY PLAN

NOTES:

1. ASSUMED ASBESTOS CONTAINING CHALKBOARDS LOCATED IN CLASSROOMS.

2. ASBESTOS CONTAINING WINDOW PUTTY LOCATED ON EXTERIOR WINDOW FRAMES.

3. ASSUMED ASBESTOS CONTAINING FLEXIBLE CONNECTORS LOCATED IN MECHANICAL ROOMS.

4. ASSUMED ASBESTOS CONTAINING FIRE DOORS LOCATED IN MECHANICAL ROOMS.

LEGEND

ASBESTOS-CONTAINING 9" x 9" FLOOR TILE AND MASTIC

PROJECT NORTH

BUILDING "C"

1/8"=1'-0" | 1

C A P E
ENVIRONMENTAL MANAGEMENT
I N C

20880 S Vermont Ave
Suite 250
Torrance, CA 90502
(310) 632-4600

REVISIONS:

No.	Date	Remarks

PROJECT NAME:

WEBSTER ELEMENTARY SCHOOL

SHEET TITLE:

BUILDING C FLOOR PLAN

JOB NO. 41017.36

DATE	DRAWN BY
ASB-03	P.MCKINGIE
BY	REVIEWED BY K.GATES
WBLDG-C	DATE OCT. 92

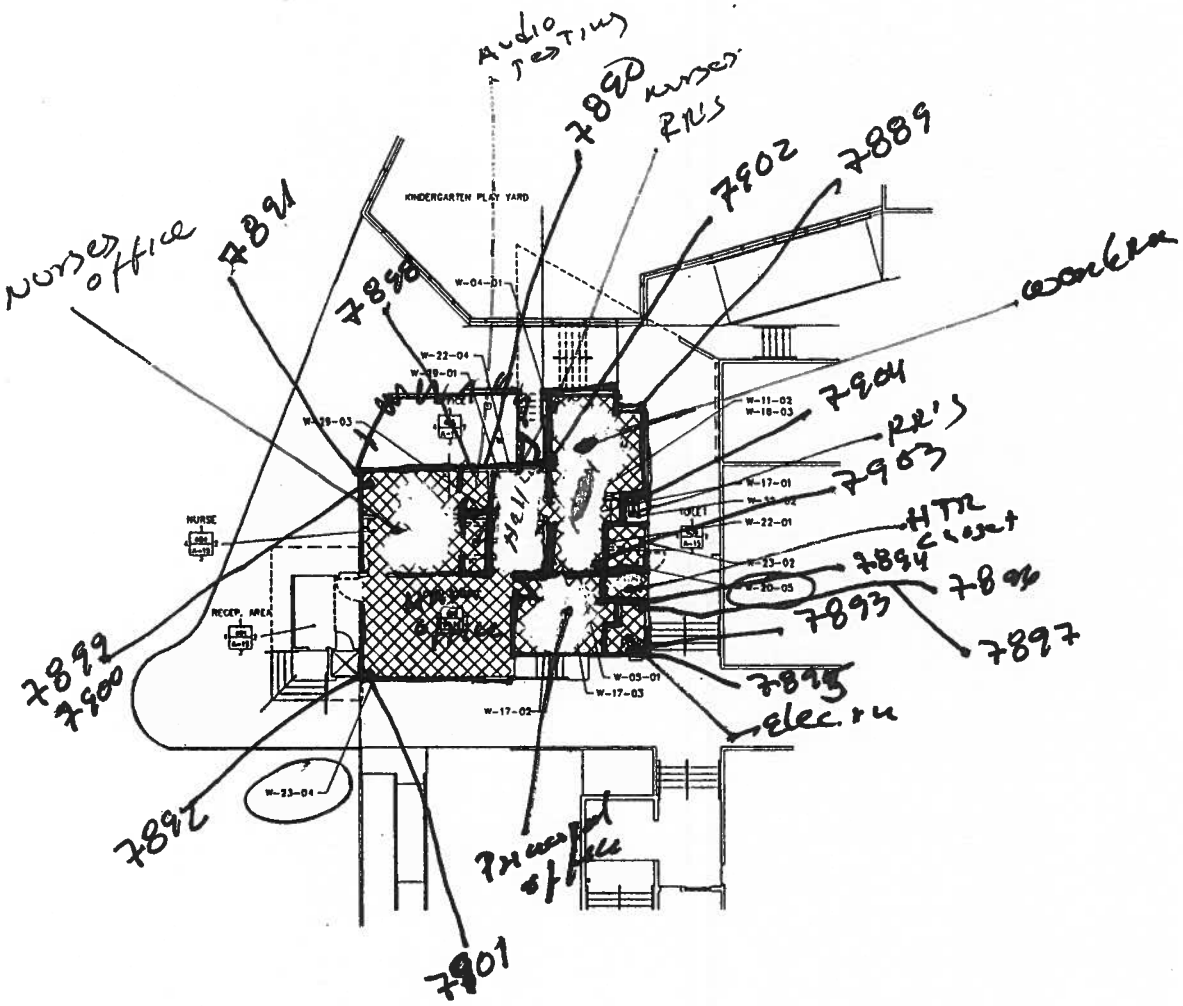

BUILDING "D" FLOOR PLAN

SCALE: 1/8" = 1'-0"

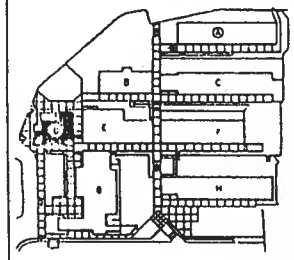

KEY PLAN

N

NOTES:

1. ASBESTOS CONTAINING WINDOW PUTTY LOCATED ON EXTERIOR WINDOW FRAMES.

2. ASBESTOS CONTAINING EXHAUST FLUE JOINT TAPE LOCATED IN MECHANICAL ROOMS.

3. ASSUMED ASBESTOS CONTAINING FLEXIBLE CONNECTORS LOCATED IN MECHANICAL ROOMS.

4. ASSUMED ASBESTOS CONTAINING FIRE DOORS LOCATED IN MECHANICAL ROOMS.

LEGEND

ASBESTOS-CONTAINING 9"x 9" FLOOR TILE AND MASTIC

PROJECT NORTH

BUILDING "D"

1/8"=1'-0" | 1

CAPE ENVIRONMENTAL MANAGEMENT INC

20800 S Vermont Ave
Suite 250
Torrance, CA 90502
(310) 532-4600

REVISIONS:

No.	Date	Remarks

PROJECT NAME:

WEBSTER ELEMENTARY SCHOOL
SANTA MONICA - MALIBU UNIFIED SCHOOL DISTRICT

SHEET TITLE:

BUILDING D FLOOR PLAN

JOB NO. 41017.34

DATE	DRAWN BY:
ASB-04	P.MCKINZIE
BY	CHECKED BY: K.GATES
WBLDG-D	DATE: OCT. 92

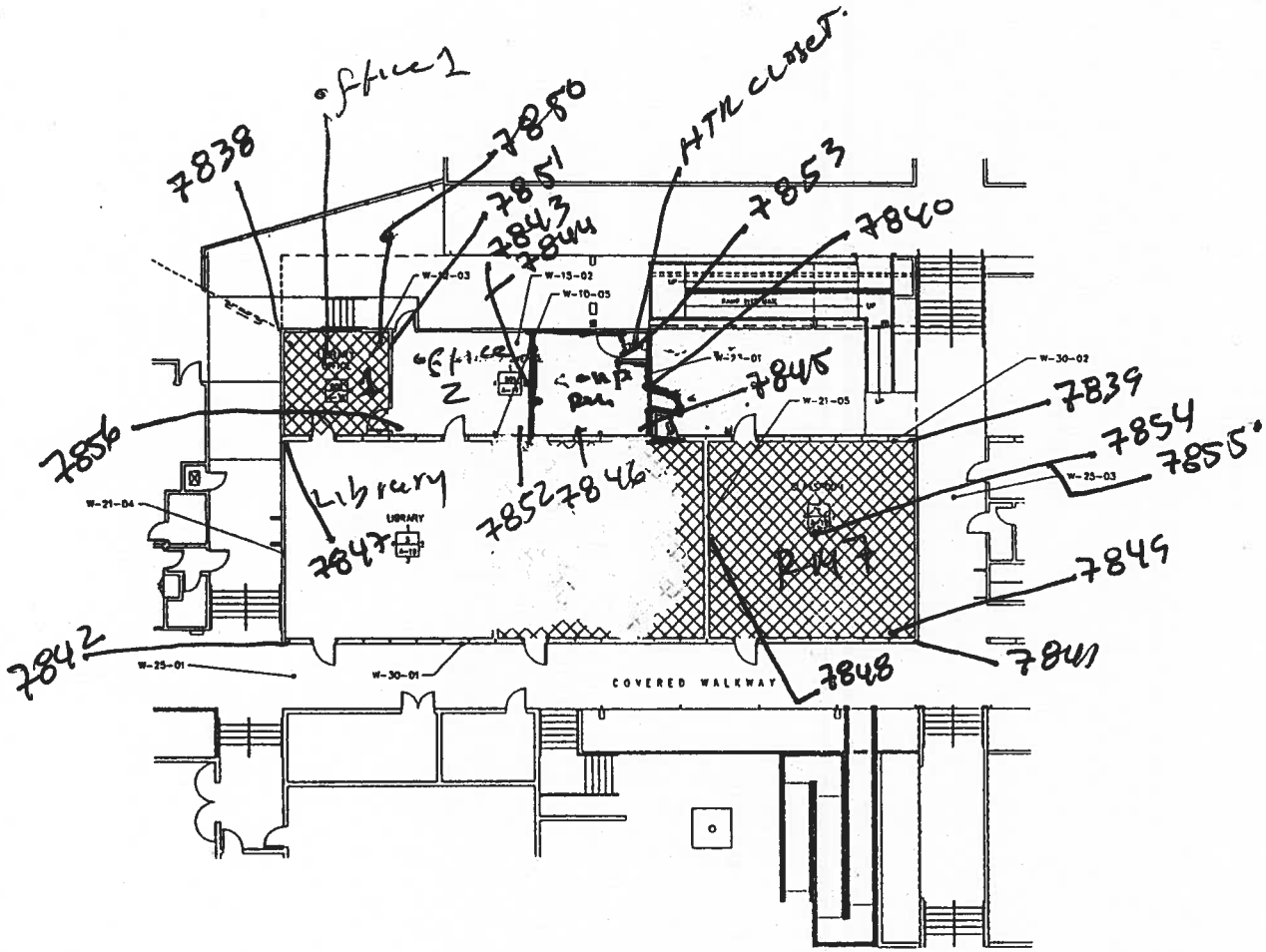

BUILDING "E" FLOOR PLAN Bldg E

SCALE: 1/8" = 1'-0"

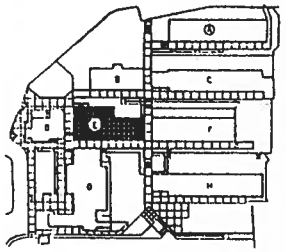

KEY PLAN

NOTES:

1. ASSUMED ASBESTOS CONTAINING CHALKBOARDS LOCATED IN CLASSROOMS.

2. ASBESTOS CONTAINING WINDOW PUTTY LOCATED ON EXTERIOR WINDOW FRAMES.

LEGEND

ASBESTOS-CONTAINING 9" x 9" FLOOR TILE AND MASTIC

PROJECT NORTH

BUILDING "E"

1/8"=1'-0" | 1

C A P E
ENVIRONMENTAL MANAGEMENT
I N C

20280 S Vermont Ave
Suite 250
Torrance, CA 90502
(310) 532-4806

REVISIONS:

No.	Date	Remarks

PROJECT NAME:

WEBSTER ELEMENTARY SCHOOL

SHEET TITLE:

BUILDING E FLOOR PLAN

JOB NO. 41017.36

SHEET:	DRAWN BY:
ASR-05	P.MCKINZIE
	REVIEWED BY: K.GATES
WBLDG-E	DATE: OCT. 92

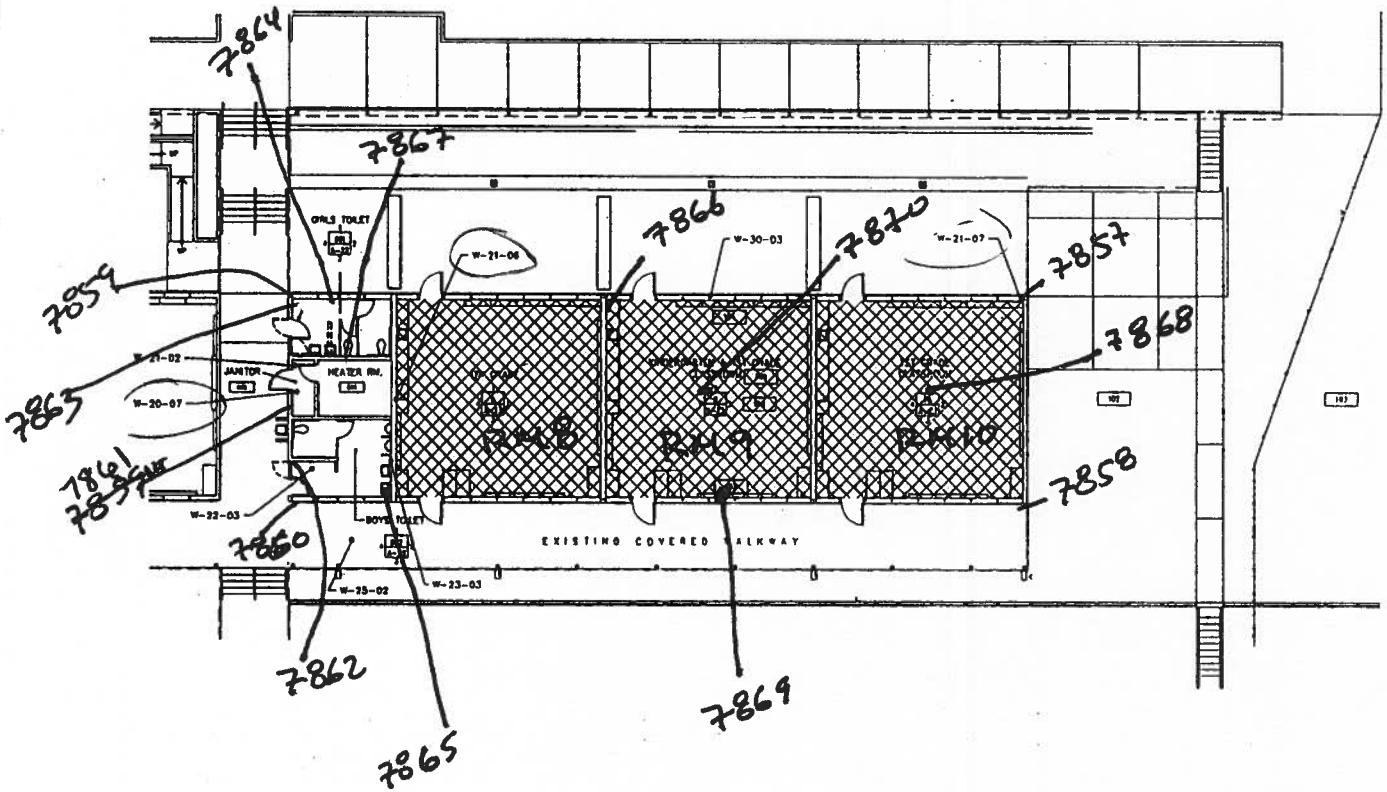

BUILDING "F" FLOOR PLAN

Bldg F

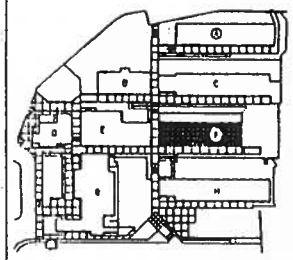

KEY PLAN

NOTES:

1. ASSUMED ASBESTOS CONTAINING CHALKBOARDS LOCATED IN CLASSROOMS.
2. ASBESTOS CONTAINING WINDOW PUTTY LOCATED ON EXTERIOR WINDOW FRAMES.
3. ASSUMED ASBESTOS CONTAINING FLEXIBLE CONNECTORS LOCATED IN MECHANICAL ROOMS.
4. ASSUMED ASBESTOS CONTAINING FIRE DOORS LOCATED IN MECHANICAL ROOMS.

LEGEND

ASBESTOS-CONTAINING 9" x 9" FLOOR TILE AND MASTIC

PROJECT NORTH

BUILDING "F"

1/8"=1'-0" | 1

CAPE ENVIRONMENTAL MANAGEMENT INC

20800 S Vermont Ave
Suite 250
Torrance, CA 90502
(310) 532-4608

REVISIONS:

No.	Date	Remarks

PROJECT TITLE:

WEBSTER ELEMENTARY SCHOOL

SHEET TITLE

BUILDING F FLOOR PLAN

JOB NO. 01017.38

DATE ASB-04

DRAWN BY R.MCKINZIE

CHECKED BY K.GATES

FILE WBLDG-F

DATE OCT. 93

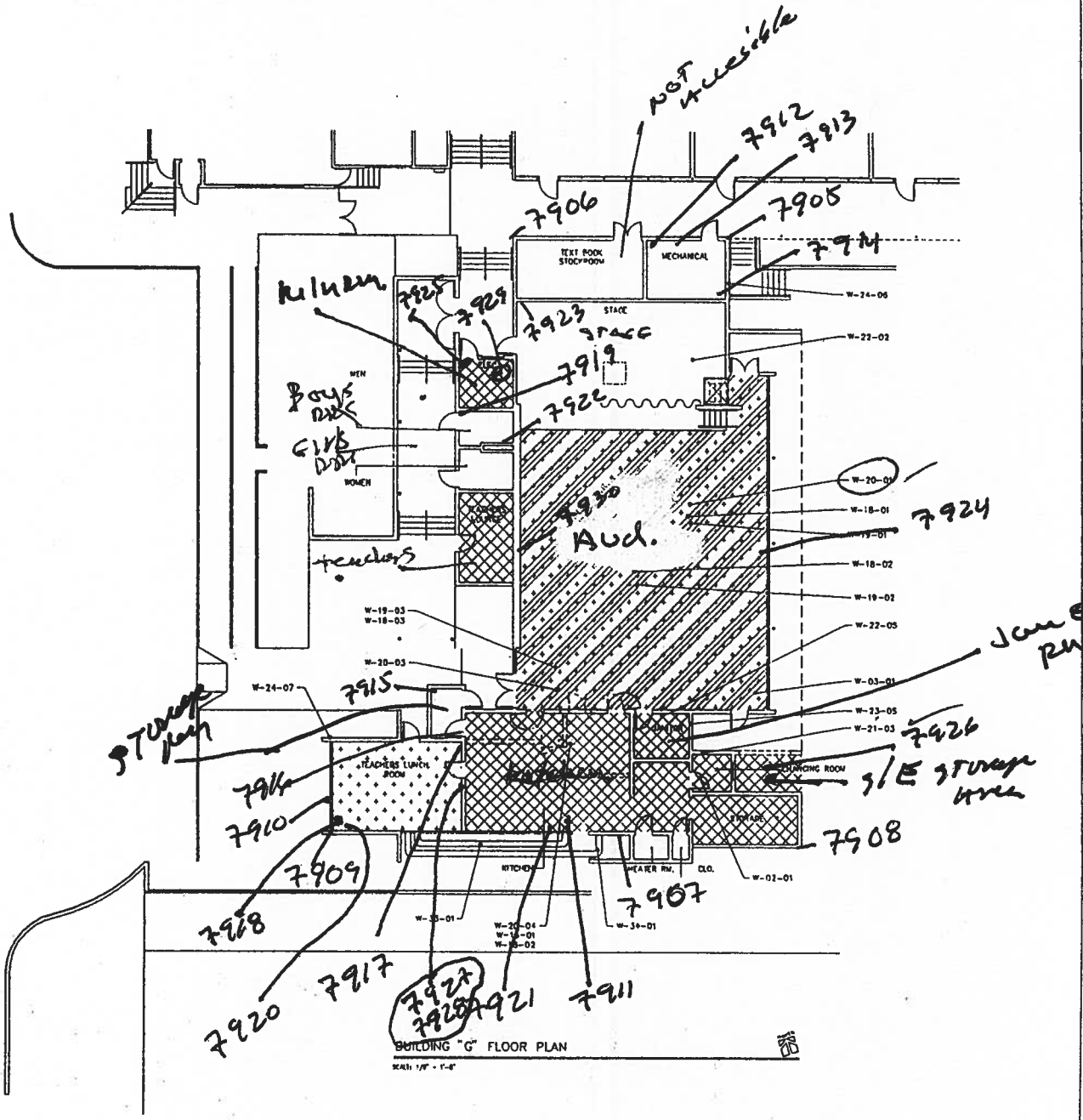

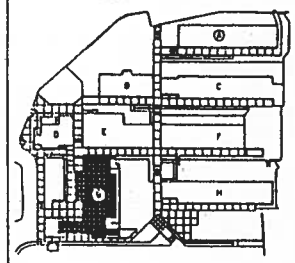

KEY PLAN

NOTES:

1. ASBESTOS CONTAINING WINDOW PUTTY LOCATED ON EXTERIOR WINDOW FRAMES.
2. ASBESTOS CONTAINING EXHAUST FLUE JOINT TAPE LOCATED IN MECHANICAL ROOMS.
3. ASSUMED ASBESTOS CONTAINING FLEXIBLE CONNECTORS LOCATED IN MECHANICAL ROOMS.
4. ASSUMED ASBESTOS CONTAINING FIRE DOORS LOCATED IN MECHANICAL ROOMS.

LEGEND

- ASBESTOS-CONTAINING 12"X 12" FLOOR TILE AND MASTIC.
- ASBESTOS-CONTAINING 9"x 9" FLOOR TILE AND MASTIC
- ASBESTOS-CONTAINING MASTIC UNDER 1'X 1' FISSURED CEILING TILE

BUILDING "G"

1/8"=1'-0" | 1

C A P E
ENVIRONMENTAL MANAGEMENT
I N C
20200 S Vermont Ave
Suite 250
Torrance, CA 90502
(310) 832-4600

REVISIONS:

No.	Date	Remarks

PROJECT NAME:

WEBSTER ELEMENTARY SCHOOL
Santa Monica - Malibu Unified School District

SHEET TITLE

BUILDING G FLOOR PLAN

JOB NO. 41017.36

ASB-07	R.MCARTHY
	K.GATES
WBLDG-G	OCT. 92

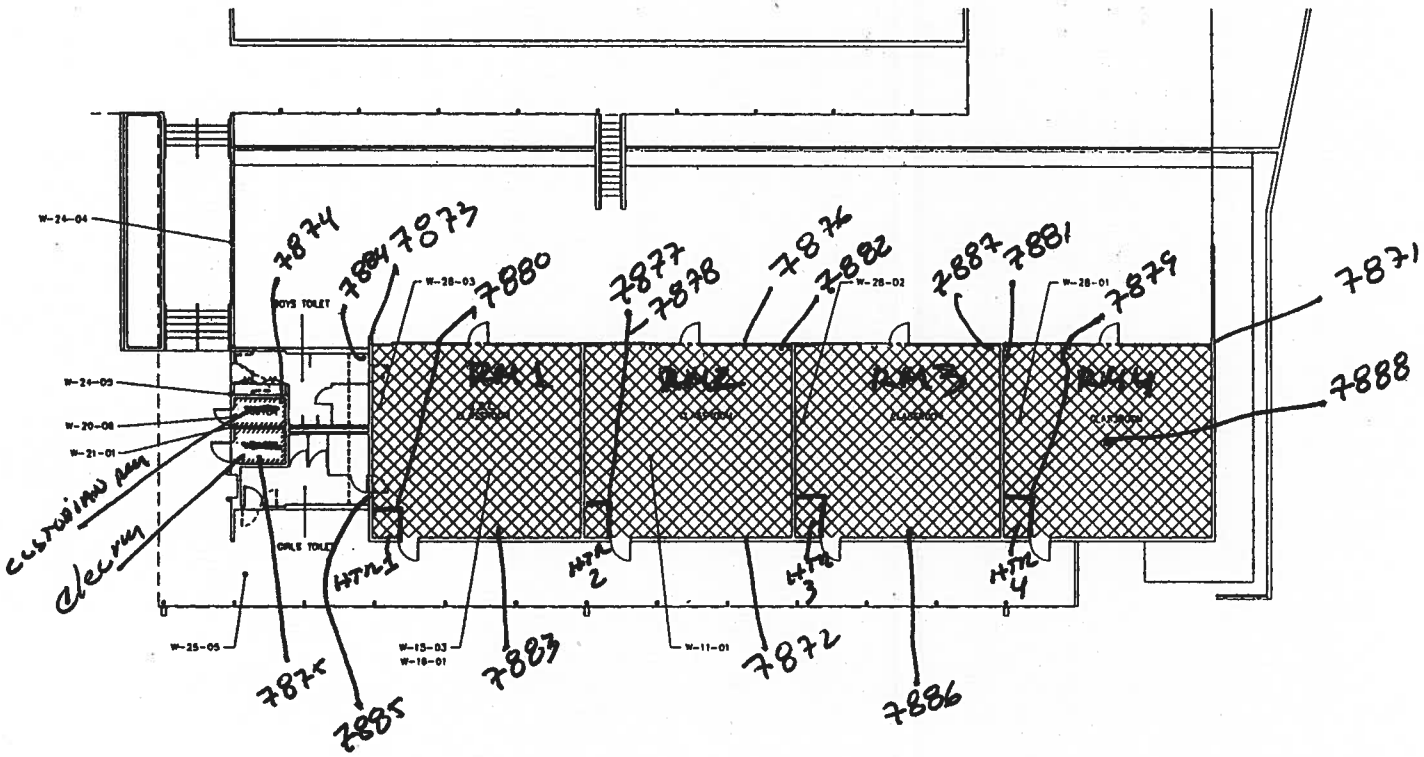

BUILDING "H" FLOOR PLAN

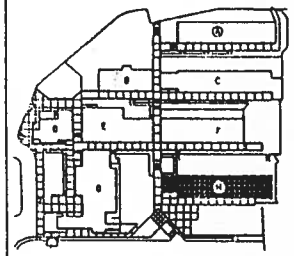

KEY PLAN

NOTES:

1. ASSUMED ASBESTOS CONTAINING CHALKBOARDS LOCATED IN CLASSROOMS.

2. ASBESTOS CONTAINING WINDOW PUTTY LOCATED ON EXTERIOR WINDOW FRAMES.

3. ASBESTOS CONTAINING SINK UNDERCOATING LOCATED ON SINKS IN CLASSROOMS.

4. ASSUMED ASBESTOS CONTAINING FIRE DOORS LOCATED IN MECHANICAL ROOMS.

LEGEND

ASBESTOS-CONTAINING 9" x 9" FLOOR TILE AND MASTIC

ASBESTOS-CONTAINING INTERIOR WALL PLASTER

PROJECT NORTH

BUILDING "H"

1/8"=1'-0" | 1

CAPE ENVIRONMENTAL MANAGEMENT INC
20280 S Vermont Ave
Suite 350
Torrance, CA 90502
(310) 832-4600

REVISIONS:

No.	Date	Remarks

PROJECT NAME:

WEBSTER ELEMENTARY SCHOOL
SANTA MONICA - MALIBU UNIFIED SCHOOL DISTRICT

SHEET TITLE:

BUILDING H FLOOR PLAN

JOB NO. 41017.36

DATE: AUG-92 | DRAWN BY: P.MCWHINE

CHECKED BY: | REVIEWED BY: K.GATES

FILE: WBLDG-H | DATE: OCT. 92

APPENDIX A

TABLE 2.2

SUMMARY OF QUALITY CONTROL SUSPECT ASBESTOS-CONTAINING MATERIAL
BULK SAMPLE LABORATORY ANALYSIS RESULTS
WEBSTER ELEMENTARY SCHOOL

SAMPLE NUMBER	MATERIAL DESCRIPTION	PRIMARY LABORATORY	QUALITY CONTROL
QC-W-01-01	9"x 9" tan floor tile	4% chrysotile	2% chrysotile
QC-W-01-01	9"x 9" tan floor tile mastic	NAD	2% chrysotile
QC-W-02-01	9"x 9" dark tan floor tile	5% chrysotile	4% chrysotile
QC-W-02-01	9"x 9" dark tan floor tile mastic	2% chrysotile	2% chrysotile
QC-W-11-01	Gypsum ceiling	NAD	NAD
QC-W-15-01	1'x 1' straight peghole ceiling tile	NAD	NAD
QC-W-19-01	1'x 1' fissured ceiling tile	NAD	NAD
QC-W-22-01	Smooth plaster ceiling	NAD	NAD
QC-W-28-01	Sink undercoating	10% chrysotile	10% chrysotile
QC-W-30-01	Window putty	4% chrysotile	3% chrysotile

NAD = No Asbestos Detected

TABLE 2.1

SUMMARY OF SUSPECT ASBESTOS-CONTAINING MATERIAL
BULK SAMPLE LABORATORY ANALYSIS RESULTS
WEBSTER ELEMENTARY SCHOOL

SAMPLE NUMBER	MATERIAL DESCRIPTION/LOCATION	LABORATORY ANALYSIS RESULTS
W-01-01	9"x 9" tan floor tile-Building G, kitchen	4% chrysotile
W-01-01	9"x 9" tan floor tile mastic-Building G kitchen	NAD
W-02-01	9"x 9" dark tan floor tile-Building G, storage room	5% chrysotile
W-02-01	9"x 9" dark tan floor tile mastic-Building G, storage room	2% chrysotile
W-03-01	12"x 12" off white floor tile-Building G, auditorium	5% chrysotile
W-03-01	12"x 12" off white floor tile mastic-Building G, auditorium	NAD
W-04-01	9"x 9" dark tan with brown streaks floor tile-Building D, Teachers work room	5% chrysotile
W-04-01	9"x 9" dark tan with brown streaks floor tile mastic-Building D, Teachers work room	3% chrysotile
W-05-01	9"x 9" tan with brown streaks floor tile-Building D, copier room	7% chrysotile
W-05-01	9"x 9" tan with brown streaks floor tile mastic-Building D copier room	10% chrysotile
W-06-01	12"x 12" brown floor tile with white streaks-Building B, kindergarten	3% chrysotile
W-06-01	12"x 12" brown floor tile with white streaks mastic-Building B classroom	5% chrysotile
W-07-01	9"x 9" gray floor tile with yellow streaks-Building B, workroom	5% chrysotile
W-07-01	9"x 9" gray floor tile with yellow streaks mastic-Building B, workroom	10% chrysotile
W-08-01	12"x 12" grey floor tile with brown streaks-Building C, E.S.L. classroom	5% chrysotile
W-08-01	12"x 12" gray floor tile with brown streaks mastic-Building C E.S.L. classroom	10% chrysotile
W-09-01	12"x 12" brown floor tile with peach streaks-Building A classroom #	<1% chrysotile
W-09-01	12"x 12" brown floor tile with peach streaks mastic-Building A classroom #	5% chrysotile
W-10-01	Gypsum walls/joint compound-Building C, E.S.L. classroom	NAD
W-10-02	Gypsum walls/joint compound-Building B, classroom #12	NAD
W-10-03	Gypsum walls/joint compound-Building C, classroom #15	NAD
W-10-04	Gypsum walls/joint compound-Building B, kindergarten classroom	<1% chrysotile
W-10-05	Gypsum walls/joint compound-Building E, library ref. room	NAD
W-11-01	Gypsum ceilings-Building H, classroom #2	NAD
W-11-02	Gypsum ceilings-Building D, copier room	NAD
W-11-03	Gypsum ceilings-Building C, E.S.L. classroom	NAD
W-11-04	Gypsum ceilings-Building B, kindergarten classroom	NAD
W-11-05	Gypsum ceilings-Building C, classroom #15	NAD
W-12-01	1'x 1' random peghole ceiling tile (new)-Building C, classroom #14	NAD
W-12-02	1'x 1' random peghole ceiling tile-Building B, classroom #12	NAD
W-12-03	1'x 1' random peghole ceiling tile-Building E, library office	NAD
W-13-01	1'x 1' random pin hole ceiling tile-Building C, E.S.L. classroom	NAD
W-13-02	1'x 1' random pin hole ceiling tile-Building C, E.S.L. classroom	NAD
W-13-03	1'x 1' random pin hole ceiling tile-Building C, E.S.L. classroom	NAD

TABLE 2.1 (cont)

SAMPLE NUMBER	MATERIAL DESCRIPTION/LOCATION	LABORATORY ANALYSIS RESULTS
W-14-01	1'x 1' random pin hole ceiling tile mastic-Building C, E.S.L. classroom	NAD
W-14-02	1'x 1' random pin hole ceiling tile mastic-Building C, E.S.L. classroom	NAD
W-14-03	1'x 1' random pin hole ceiling tile mastic-Building C, E.S.L. classroom	NAD
W-15-01	1'x 1' straight peghole ceiling tile-Building G, kitchen	NAD
W-15-02	1'x 1' straight peghole ceiling tile-Building D, library reference room	NAD
W-15-03	1'x 1' straight peghole ceiling tile-Building H, classroom #	NAD
W-16-01	1'x 1' straight peghole ceiling tile mastic-Building H, classroom #1	NAD
W-16-02	1'x 1' straight peghole ceiling tile mastic-Building G, kitchen	NAD
W-16-03	1'x 1' straight peghole ceiling tile mastic-Building D, copier room	NAD
W-17-01	1'x 1' random peghole ceiling tile (old)-Building D, copier room	NAD
W-17-02	1'x 1' random peghole ceiling tile (old)-Building D, copier room	NAD
W-17-03	1'x 1' random peghole ceiling tile (old)-Building D, copier room	NAD
W-18-01	1'x 1' fissured ceiling tile-Building G, auditorium	NAD
W-18-02	1'x 1' fissured ceiling tile-Building G, auditorium	NAD
W-18-03	1'x 1' fissured ceiling tile-Building G, auditorium	NAD
W-19-01	1'x 1' fissured ceiling tile mastic-Building G, auditorium	NAD
W-19-02	1'x 1' fissured ceiling tile mastic-Building G, auditorium	3% chrysotile
W-19-03	1'x 1' fissured ceiling tile mastic-Building G, auditorium	NAD
W-20-01	Rough plaster ceilings-Building G, auditorium	NAD
W-20-02	Rough plaster ceilings-Building G, auditorium	NAD
W-20-03	Rough plaster ceilings-Building G, auditorium	NAD
W-20-04	Rough plaster ceilings-Building G, kitchen	NAD
W-20-05	Rough plaster ceilings-Building D, bathroom	NAD
*W-20-06	Rough plaster ceilings-Building H, heater room	NAD
W-20-07	Rough plaster ceilings-Building F, heater room	NAD
W-21-01	Rough plaster walls-Building H, heater room	<1% chrysotile
W-21-02	Rough plaster walls-Building F, heater room	NAD
W-21-03	Rough plaster walls-Building G, outside janitor's room	NAD
W-21-04	Rough plaster walls-Building E, library	NAD
W-21-05	Rough plaster walls-Building E, classroom	NAD
W-21-06	Rough plaster walls-Building F, 4th grade classroom	NAD
W-21-07	Rough plaster walls-Building F, 1st grade classroom	NAD
W-22-01	Smooth plaster ceilings-Building D, bathroom	NAD
W-22-02	Smooth plaster ceilings-Building G, stage	NAD
W-22-03	Smooth plaster ceilings-Building F, boys bathroom	NAD
W-22-04	Smooth plaster ceilings-Building D, HVAC closet	NAD
W-22-05	Smooth plaster ceilings-Building G, janitor's room	NAD
W-23-01	Smooth plaster walls-Building E, library reference room	NAD
W-23-02	Smooth plaster walls-Building D, bathroom	NAD
W-23-03	Smooth plaster walls-Building F, boys bathroom	NAD
W-23-04	Smooth plaster walls-Building D, administration office	NAD
W-23-05	Smooth plaster walls-Building G, outside janitor's room	NAD
W-24-01	Exterior stucco walls-Building A, outside room #17	NAD
W-24-02	Exterior stucco walls-Building B, outside classroom #12	NAD
W-24-03	Exterior stucco walls-Building C, classroom #14	NAD

TABLE 2.1 (cont)

SAMPLE NUMBER	MATERIAL DESCRIPTION/LOCATION	LABORATORY ANALYSIS RESULTS
W-24-04	Exterior stucco walls-Building H, breeze way north west of Building H	NAD
W-24-05	Exterior stucco walls-Building H, west side	NAD
W-24-06	Exterior stucco walls-Building G, outside mechanical room	NAD
W-24-07	Exterior stucco walls-Building G, outside teachers lunch room	NAD
W-25-01	Exterior stucco overhang-Building E & G, breeze way between	NAD
W-25-02	Exterior stucco overhang-Building F, west end of walkway	NAD
W-25-03	Exterior stucco overhang-Building E & F	NAD
W-25-04	Exterior stucco overhang-Building B & C, breeze way between	NAD
W-25-05	Exterior stucco overhang-Building H, walkway	NAD
W-28-01	Sink undercoating-Building H, classroom #4	10% chrysotile
W-28-02	Sink undercoating-Building H, classroom #3	15% chrysotile
W-28-03	Sink undercoating-Building H, classroom #1	15% chrysotile
W-29-01	HVAC duct insulation-Building D, closet	NAD
W-29-02	Canvas wrap duct insulation-Building A, HVAC room	NAD
W-29-03	Canvas wrap duct insulation-Building D, nurse's office	NAD
W-29-04	Canvas wrap duct insulation-Building A-HVAC room	NAD
W-30-01	Window putty-Building E, library	4% chrysotile
W-30-02	Window putty-Building E, classroom	7% chrysotile
W-30-03	Window putty-Building F, outside kindergarten & 1st grade classroom	7% chrysotile
W-31-01	Flex connectors-HVAC room, Building A	Assumed
W-32-01	HVAC exhaust vent pipe joint tape-Building D, HVAC room	70% chrysotile
W-32-02	HVAC exhaust vent pipe joint tape-Building G, Boiler room	NAD
W-32-03	HVAC exhaust vent pipe joint tape-Building B, Boiler room	70% chrysotile
W-32-04	HVAC exhaust vent pipe joint tape-Building B, Boiler room	60% chrysotile
W-33-01	Pipe insulation-Building G, Outside kitchen	NAD
W-34-01	Pipe fittings insulation-Building G, Outside kitchen	NAD
W-36-01	Chalkboards-Throughout school	Assumed

APPENDIX D

APPENDIX E

INSERT DOCUMENTATION FROM SUBSEQUENT ASBESTOS ABATEMENT PROJECTS

WEBSTER ELEM.

BUILDING INSPECTION REPORT AND ASBESTOS MANAGEMENT PLAN

BUILDING NUMBER : Bldg B
ASBESTOS-CONTAINING MATERIAL DESCRIPTION : 12"x12" Brown w/White streaks FT w/Mas
HOMOGENEOUS AREA # : 6
FUNCTIONAL AREA : Kindergarten classRoom

TYPE OF MATERIAL : SURFACING ____ THERMAL SYSTEM INSULATION ____ MISC. ✓

APPROXIMATE QUANTITY : 900 Sq ft

FRIABILITY : NON-FRIABLE ✓
MODERATELY FRIABLE ____
FRIABLE ____

MATERIAL LOCATIONS : Bldg B Kindergarten ClassRoom # 11

SAMPLE #	SAMPLE LOCATION	ANALYSIS RESULTS

CONDITION OF ACM OR ACE:

Percent Distributed damage: None
Type of damage: No Damage
Overall rating: Good Condition (3)

POTENTIAL FOR DISTURBANCE OF ACM OR ACE:

	LOW 1	2	3	4	HIGH 5
Potential for contact:			✓		
Influence of vibration:		✓			
Potential for air erosion:		✓			

IS MATERIAL ACCESSIBLE?: Yes

IS MATERIAL LOCATED IN AN AIR PLENUM?: NO

MANAGEMENT PLANNER'S HAZARD ASSESSMENT: Good Condition with potential for damage

MANAGEMENT PLANNER'S RECOMMENDED RESPONSE ACTION: Take steps to reduce potential for disturb

INSPECTOR'S COMMENTS: Intact Continue O&M

WEBSTER ELEM.

BUILDING INSPECTION REPORT AND ASBESTOS MANAGEMENT PLAN

BUILDING NUMBER : Bldg. B
ASBESTOS-CONTAINING MATERIAL DESCRIPTION : 9"x9" Gray w/yellow streaks ~~PT~~ w/ mast
HOMOGENEOUS AREA # : 7
FUNCTIONAL AREA : Work Room

TYPE OF MATERIAL : SURFACING ____ THERMAL SYSTEM INSULATION ____ MISC. ✓

APPROXIMATE QUANTITY : 900 SF

FRIABILITY : NON-FRIABLE ✓
MODERATELY FRIABLE ____
FRIABLE ____

MATERIAL LOCATIONS : Bldg B Work Room room 12

SAMPLE #	SAMPLE LOCATION	ANALYSIS RESULTS

CONDITION OF ACM OR ACE:

Percent Distributed damage: None
Type of damage: No Damage
Overall rating: Good Condition (3)

POTENTIAL FOR DISTURBANCE OF ACM OR ACE:

	LOW 1	2	3	4	HIGH 5
Potential for contact:			✓		
Influence of vibration:		✓			
Potential for air erosion:		✓			

IS MATERIAL ACCESSIBLE?: Yes

IS MATERIAL LOCATED IN AN AIR PLENUM?: No

MANAGEMENT PLANNER'S HAZARD ASSESSMENT: Good condition with potential for damage

MANAGEMENT PLANNER'S RECOMMENDED RESPONSE ACTION: O&M, reduce potential for disturbance

INSPECTOR'S COMMENTS: Intact Continue O&M

WEBSTER ELEM.

BUILDING INSPECTION REPORT AND ASBESTOS MANAGEMENT PLAN

BUILDING NUMBER : B, D
ASBESTOS-CONTAINING MATERIAL DESCRIPTION : HVAC Exhaust Vent Pipe Joint Tape
HOMOGENEOUS AREA # : 32
FUNCTIONAL AREA : HVac Room, Boiler Rm.

TYPE OF MATERIAL : SURFACING _____ THERMAL SYSTEM INSULATION ____ MISC. ✓

APPROXIMATE QUANTITY : 1

FRIABILITY :
- NON-FRIABLE ✓
- MODERATELY FRIABLE _____
- FRIABLE _____

MATERIAL LOCATIONS : Bldg B, D HVac, Boiler Rm.

SAMPLE #	SAMPLE LOCATION	ANALYSIS RESULTS

CONDITION OF ACM OR ACE:

Percent Distributed damage: None ~~Damage~~
Type of damage: No Damage
Overall rating: Good Condition (3)

POTENTIAL FOR DISTURBANCE OF ACM OR ACE:

	LOW 1	2	3	4	HIGH 5
Potential for contact:		✓			
Influence of vibration:		✓			
Potential for air erosion:		✓			

IS MATERIAL ACCESSIBLE?: Yes

IS MATERIAL LOCATED IN AN AIR PLENUM?: Yes

MANAGEMENT PLANNER'S HAZARD ASSESSMENT: Good condition with potential for damage

MANAGEMENT PLANNER'S RECOMMENDED RESPONSE ACTION: Continue O & M

INSPECTOR'S COMMENTS: Intact Continue O & M

WEBSTER ELEM.

BUILDING INSPECTION REPORT AND ASBESTOS MANAGEMENT PLAN

BUILDING NUMBER : B?
ASBESTOS-CONTAINING MATERIAL DESCRIPTION : Gypsum Wall/Joint Compound
HOMOGENEOUS AREA # : 10
FUNCTIONAL AREA : Classroom #12, Kindergarden

TYPE OF MATERIAL : SURFACING _____ THERMAL SYSTEM INSULATION ____ MISC. ✓

APPROXIMATE QUANTITY : _____

FRIABILITY :
NON-FRIABLE ___X___
MODERATELY FRIABLE ___✓___
FRIABLE _____

MATERIAL LOCATIONS : Bldg B Classroom #12, Kindergarten

SAMPLE #	SAMPLE LOCATION	ANALYSIS RESULTS

CONDITION OF ACM OR ACE:

Percent Distributed damage: None
Type of damage: No Damage
Overall rating: Good Condition (2)

POTENTIAL FOR DISTURBANCE OF ACM OR ACE:

	LOW 1	2	3	4	HIGH 5
Potential for contact:			✓		
Influence of vibration:			✓		
Potential for air erosion:		✓			

IS MATERIAL ACCESSIBLE?: Yes

IS MATERIAL LOCATED IN AN AIR PLENUM?: No

MANAGEMENT PLANNER'S HAZARD ASSESSMENT: Good Condition with potential for damage

MANAGEMENT PLANNER'S RECOMMENDED RESPONSE ACTION: Continue O&M, reduce potential for disturbance

INSPECTOR'S COMMENTS: Continue O&M

WEBSTER KLEIN.

BUILDING INSPECTION REPORT AND ASBESTOS MANAGEMENT PLAN

BUILDING NUMBER : Bldg C
ASBESTOS-CONTAINING MATERIAL DESCRIPTION : 12"X12" Grey W/BROWN STREAKS FT W/MASTIC
HOMOGENEOUS AREA # : 8
FUNCTIONAL AREA : ESL Class Rooms

TYPE OF MATERIAL : SURFACING ____ THERMAL SYSTEM INSULATION ____ MISC. ✓

APPROXIMATE QUANTITY : 5000SF

FRIABILITY : NON-FRIABLE ✓
MODERATELY FRIABLE ____
FRIABLE ____

MATERIAL LOCATIONS : Bldg C ESL Class Rooms 13-16, 16A

SAMPLE #	SAMPLE LOCATION	ANALYSIS RESULTS

CONDITION OF ACM OR ACE:

Percent Distributed damage: None
Type of damage: No Damage
Overall rating: Good Condition (3)

POTENTIAL FOR DISTURBANCE OF ACM OR ACE:

	LOW 1	2	3	4	HIGH 5
Potential for contact:				✓	
Influence of vibration:		✓			
Potential for air erosion:		✓			

IS MATERIAL ACCESSIBLE?: Yes

IS MATERIAL LOCATED IN AN AIR PLENUM?: NO

MANAGEMENT PLANNER'S HAZARD ASSESSMENT: Good Condition with potential for damage

MANAGEMENT PLANNER'S RECOMMENDED RESPONSE ACTION: Reduce potential for disturbance

INSPECTOR'S COMMENTS:

Intact Continue O&M

Webster

BUILDING INSPECTION REPORT AND ASBESTOS MANAGEMENT PLAN

BUILDING NUMBER : D
ASBESTOS-CONTAINING MATERIAL DESCRIPTION : 9" x 9" light-brown floor tile
HOMOGENEOUS AREA # :
FUNCTIONAL AREA : Admin. (Offices)

TYPE OF MATERIAL : SURFACING ____ THERMAL SYSTEM INSULATION ____ MISC. ✓

APPROXIMATE QUANTITY : 3000 SF

FRIABILITY : NON-FRIABLE ✓
MODERATELY FRIABLE ____
FRIABLE ____

MATERIAL LOCATIONS : Offices

SAMPLE #	SAMPLE LOCATION	ANALYSIS RESULTS

CONDITION OF ACM OR ACE:

Percent Distributed damage: None
Type of damage: No Damage
Overall rating: Good Condition (3)

POTENTIAL FOR DISTURBANCE OF ACM OR ACE:

	LOW 1	2	3	4	HIGH 5
Potential for contact:			✓		
Influence of vibration:		✓			
Potential for air erosion:		✓			

IS MATERIAL ACCESSIBLE?: Yes

IS MATERIAL LOCATED IN AN AIR PLENUM?: No

MANAGEMENT PLANNER'S HAZARD ASSESSMENT: Good Condition with potential for damage

MANAGEMENT PLANNER'S RECOMMENDED RESPONSE ACTION: Continue O & M

INSPECTOR'S COMMENTS:

~~Good Condition~~
Intact Continue O & M

WEBSTER

BUILDING INSPECTION REPORT AND ASBESTOS MANAGEMENT PLAN

BUILDING NUMBER : E (CLASSROOMS 5-7)
ASBESTOS-CONTAINING MATERIAL DESCRIPTION : 9" x 9" light brown Floor tile
HOMOGENEOUS AREA # :
FUNCTIONAL AREA : Classrooms

TYPE OF MATERIAL : SURFACING ____ THERMAL SYSTEM INSULATION ____ MISC. ✓

APPROXIMATE QUANTITY : 3000

FRIABILITY : NON-FRIABLE ✓
MODERATELY FRIABLE ____
FRIABLE ____

MATERIAL LOCATIONS : Classrooms 5-7

SAMPLE #	SAMPLE LOCATION	ANALYSIS RESULTS

CONDITION OF ACM OR ACE:

Percent Distributed damage: None
Type of damage: No Damage
Overall rating: Good Condition (3)

POTENTIAL FOR DISTURBANCE OF ACM OR ACE:

	LOW 1	2	3	4	HIGH 5
Potential for contact:				✓	
Influence of vibration:		✓			
Potential for air erosion:		✓			

IS MATERIAL ACCESSIBLE?: ~~Yes~~ Yes

IS MATERIAL LOCATED IN AN AIR PLENUM?: No

MANAGEMENT PLANNER'S HAZARD ASSESSMENT: Good Condition with potential for damage

MANAGEMENT PLANNER'S RECOMMENDED RESPONSE ACTION: Should continue O & M

INSPECTOR'S COMMENTS: Intact Continue O & M
Tiles in classroom #5 underneath Carpet

WEBSTER

BUILDING INSPECTION REPORT AND ASBESTOS MANAGEMENT PLAN

BUILDING NUMBER : F
ASBESTOS-CONTAINING MATERIAL DESCRIPTION : 9"x 9", brown floor tile
HOMOGENEOUS AREA # :
FUNCTIONAL AREA : classrooms

TYPE OF MATERIAL : SURFACING _____ THERMAL SYSTEM INSULATION ___ MISC. ✓

APPROXIMATE QUANTITY : 3000 SF

FRIABILITY : NON-FRIABLE ✓
MODERATELY FRIABLE _____
FRIABLE _____

MATERIAL LOCATIONS : classrooms

SAMPLE #	SAMPLE LOCATION	ANALYSIS RESULTS

CONDITION OF ACM OR ACE:

Percent Distributed damage: None
Type of damage: No Damage
Overall rating: Good Condition (3)

POTENTIAL FOR DISTURBANCE OF ACM OR ACE:

	LOW 1	2	3	4	HIGH 5
Potential for contact:				✓	
Influence of vibration:		✓			
Potential for air erosion:		✓			

IS MATERIAL ACCESSIBLE?: Yes

IS MATERIAL LOCATED IN AN AIR PLENUM?: No

MANAGEMENT PLANNER'S HAZARD ASSESSMENT: Good Condition with potential for damag.

MANAGEMENT PLANNER'S RECOMMENDED RESPONSE ACTION: Continue O & M

INSPECTOR'S COMMENTS: Intact Continue O & M

WEBSTER ELEM.

BUILDING INSPECTION REPORT AND ASBESTOS MANAGEMENT PLAN

BUILDING NUMBER : E, F
ASBESTOS-CONTAINING MATERIAL DESCRIPTION : Window caulking
HOMOGENEOUS AREA # : 30
FUNCTIONAL AREA : Library, Class Room

TYPE OF MATERIAL : SURFACING ____ THERMAL SYSTEM INSULATION ____ MISC. ✓

APPROXIMATE QUANTITY : 10

FRIABILITY : NON-FRIABLE ____
MODERATELY FRIABLE ✓
FRIABLE ✓

MATERIAL LOCATIONS : Bldg E Library, classRoom/Bldg F ClassRoom

SAMPLE #	SAMPLE LOCATION	ANALYSIS RESULTS

CONDITION OF ACM OR ACE:

Percent Distributed damage: None
Type of damage: No Damage
Overall rating: Good Condition (2)

POTENTIAL FOR DISTURBANCE OF ACM OR ACE:

	LOW 1	2	3	4	HIGH 5
Potential for contact:			✓		
Influence of vibration:		✓			
Potential for air erosion:		✓			

IS MATERIAL ACCESSIBLE?: Yes

IS MATERIAL LOCATED IN AN AIR PLENUM?: No

MANAGEMENT PLANNER'S HAZARD ASSESSMENT: Good Condition with low potential for damage

MANAGEMENT PLANNER'S RECOMMENDED RESPONSE ACTION: Should Continue O & M

INSPECTOR'S COMMENTS: Continue O & M

WEBSTER ELEM.

BUILDING INSPECTION REPORT AND ASBESTOS MANAGEMENT PLAN

BUILDING NUMBER : G (Auditorium)
ASBESTOS-CONTAINING MATERIAL DESCRIPTION : 9"x9" ~~Dark Tan~~ brown Floor Tile w/Mastic
HOMOGENEOUS AREA # : 2
FUNCTIONAL AREA : Storage Room

TYPE OF MATERIAL : SURFACING _____ THERMAL SYSTEM INSULATION ____ MISC. ✓

APPROXIMATE QUANTITY : 70 sq ft

FRIABILITY : NON-FRIABLE ✓
MODERATELY FRIABLE _____
FRIABLE _____

MATERIAL LOCATIONS : Bldg G Storage Room

SAMPLE #	SAMPLE LOCATION	ANALYSIS RESULTS

CONDITION OF ACM OR ACE:

Percent Distributed damage: ~~Damag~~ Moderate Damage <10%
Type of damage: Missing tiles
Overall rating: Fair (4)

POTENTIAL FOR DISTURBANCE OF ACM OR ACE:

	LOW 1	2	3	4	HIGH 5
Potential for contact:			✓		
Influence of vibration:			✓		
Potential for air erosion:		✓			

IS MATERIAL ACCESSIBLE?: Yes

IS MATERIAL LOCATED IN AN AIR PLENUM?: No

MANAGEMENT PLANNER'S HAZARD ASSESSMENT: Damaged with low potential for Significant da

MANAGEMENT PLANNER'S RECOMMENDED RESPONSE ACTION: Replace missing tiles or remove if feasible

INSPECTOR'S COMMENTS: Repair

WEBSTER

BUILDING INSPECTION REPORT AND ASBESTOS MANAGEMENT PLAN

BUILDING NUMBER : G
ASBESTOS-CONTAINING MATERIAL DESCRIPTION : 12"x 12" off-white Floor Tile
HOMOGENEOUS AREA # : 3
FUNCTIONAL AREA : auditorium, Kitchen Lunchroom

TYPE OF MATERIAL : SURFACING ____ THERMAL SYSTEM INSULATION ____ MISC. ✓

APPROXIMATE QUANTITY : 2800

FRIABILITY : NON-FRIABLE ✓
MODERATELY FRIABLE ____
FRIABLE ____

MATERIAL LOCATIONS : Bldg G Auditorium, Kitchen Lunchroom

SAMPLE #	SAMPLE LOCATION	ANALYSIS RESULTS

CONDITION OF ACM OR ACE:

Percent Distributed damage: None ~~Damage~~
Type of damage: No Damage
Overall rating: Good Condition (3)

POTENTIAL FOR DISTURBANCE OF ACM OR ACE:

	LOW 1	2	3	4	HIGH 5
Potential for contact:			✓		
Influence of vibration:		✓			
Potential for air erosion:		✓			

IS MATERIAL ACCESSIBLE?: Yes

IS MATERIAL LOCATED IN AN AIR PLENUM?: No

MANAGEMENT PLANNER'S HAZARD ASSESSMENT: Good Condition with potential for damage

MANAGEMENT PLANNER'S RECOMMENDED RESPONSE ACTION: continue O & M
Take steps to reduce potential for disturbance

INSPECTOR'S COMMENTS: Intact Continue O & M

WLCSIC -

BUILDING INSPECTION REPORT AND ASBESTOS MANAGEMENT PLAN

BUILDING NUMBER : G
ASBESTOS-CONTAINING MATERIAL DESCRIPTION : 9"x 9" ~~Tan~~ brown Floor Tile
HOMOGENEOUS AREA # : 1
FUNCTIONAL AREA : Kitchen

TYPE OF MATERIAL : SURFACING _____ THERMAL SYSTEM INSULATION ___ MISC. ✓

APPROXIMATE QUANTITY : 900 SF

FRIABILITY : NON-FRIABLE ✓
MODERATELY FRIABLE _____
FRIABLE _____

MATERIAL LOCATIONS : Bld G Kitchen

SAMPLE #	SAMPLE LOCATION	ANALYSIS RESULTS

CONDITION OF ACM OR ACE:

Percent Distributed damage: None
Type of damage: No Damage
Overall rating: Good Condition (3)

POTENTIAL FOR DISTURBANCE OF ACM OR ACE:

	LOW 1	2	3	4	HIGH 5
Potential for contact:			✓		
Influence of vibration:		✓			
Potential for air erosion:		✓			

IS MATERIAL ACCESSIBLE?: Yes

IS MATERIAL LOCATED IN AN AIR PLENUM?: No

MANAGEMENT PLANNER'S HAZARD ASSESSMENT: Good Condition with potential for damage

MANAGEMENT PLANNER'S RECOMMENDED RESPONSE ACTION: Continue O & M

INSPECTOR'S COMMENTS: Intact Continue O & M

WEBSTER ELEM

BUILDING INSPECTION REPORT AND ASBESTOS MANAGEMENT PLAN

BUILDING NUMBER : G
ASBESTOS-CONTAINING MATERIAL DESCRIPTION : 1'x1' Fissured CT Mastic
HOMOGENEOUS AREA # : 19
FUNCTIONAL AREA : Auditorium

TYPE OF MATERIAL : SURFACING ____ THERMAL SYSTEM INSULATION ____ MISC. ✓

APPROXIMATE QUANTITY : 3000 Sq ft

FRIABILITY :
- NON-FRIABLE ✓
- MODERATELY FRIABLE
- FRIABLE

MATERIAL LOCATIONS : Bldg G Auditorium

SAMPLE #	SAMPLE LOCATION	ANALYSIS RESULTS

CONDITION OF ACM OR ACE:

Percent Distributed damage: 5%
Type of damage: missing Tiles
Overall rating: Fair (4)

POTENTIAL FOR DISTURBANCE OF ACM OR ACE:

	LOW 1	2	3	4	HIGH 5
Potential for contact:		✓			
Influence of vibration:			✓		
Potential for air erosion:		✓			

IS MATERIAL ACCESSIBLE?: Yes

IS MATERIAL LOCATED IN AN AIR PLENUM?: No

MANAGEMENT PLANNER'S HAZARD ASSESSMENT: Damaged condition with low potential for significant dam

MANAGEMENT PLANNER'S RECOMMENDED RESPONSE ACTION: Repair or replace missing tiles

INSPECTOR'S COMMENTS:

Repair

~~Listed in Present Mgmt Plan but it appears that the Transite wall panels [illegible] Fully the A.C.M~~

WEBSTER ELEM.

BUILDING INSPECTION REPORT AND ASBESTOS MANAGEMENT PLAN

BUILDING NUMBER : Bldg H
ASBESTOS-CONTAINING MATERIAL DESCRIPTION : Sink undercoating
HOMOGENEOUS AREA # : 28
FUNCTIONAL AREA : Classroom

TYPE OF MATERIAL : SURFACING _____ THERMAL SYSTEM INSULATION ____ MISC. ✓

APPROXIMATE QUANTITY : _____

FRIABILITY : NON-FRIABLE ✓
MODERATELY FRIABLE _____
FRIABLE _____

MATERIAL LOCATIONS : Bldg H classrooms #1, #3, #4

SAMPLE #	SAMPLE LOCATION	ANALYSIS RESULTS

CONDITION OF ACM OR ACE:

Percent Distributed damage: None
Type of damage: No Damage
Overall rating: Good Condition (2)

POTENTIAL FOR DISTURBANCE OF ACM OR ACE:

	LOW 1	2	3	4	HIGH 5
Potential for contact:		✓			
Influence of vibration:		✓			
Potential for air erosion:		✓			

IS MATERIAL ACCESSIBLE?: Yes

IS MATERIAL LOCATED IN AN AIR PLENUM?: No

MANAGEMENT PLANNER'S HAZARD ASSESSMENT: Good condition with low potential for damage

MANAGEMENT PLANNER'S RECOMMENDED RESPONSE ACTION: Intact continue O & M

INSPECTOR'S COMMENTS: Continue O & M

NEBSTER

BUILDING INSPECTION REPORT AND ASBESTOS MANAGEMENT PLAN

BUILDING NUMBER : H
ASBESTOS-CONTAINING MATERIAL DESCRIPTION : 9" x 9" Gold Floor Tile
HOMOGENEOUS AREA # :
FUNCTIONAL AREA : Classrooms

TYPE OF MATERIAL : SURFACING _____ THERMAL SYSTEM INSULATION ____ MISC. ✓

APPROXIMATE QUANTITY : 4000 SF

FRIABILITY : NON-FRIABLE ✓
MODERATELY FRIABLE _____
FRIABLE _____

MATERIAL LOCATIONS : Rooms 1–4

SAMPLE #	SAMPLE LOCATION	ANALYSIS RESULTS

CONDITION OF ACM OR ACE:

Percent Distributed damage: None
Type of damage: No Damage
Overall rating: Good Condition (3)

POTENTIAL FOR DISTURBANCE OF ACM OR ACE:

	LOW 1	2	3	4	HIGH 5
Potential for contact:				✓	
Influence of vibration:		✓			
Potential for air erosion:		✓			

IS MATERIAL ACCESSIBLE?: Yes

IS MATERIAL LOCATED IN AN AIR PLENUM?: No

MANAGEMENT PLANNER'S HAZARD ASSESSMENT: Good Condition with Potential for damage

MANAGEMENT PLANNER'S RECOMMENDED RESPONSE ACTION: Continue O & M

INSPECTOR'S COMMENTS: Intact Continue O & M

APPENDIX B

United States Department of Commerce
National Institute of Standards and Technology

NVLAP

Certificate of Accreditation

CONCORD ANALYSIS, INC.
CHATSWORTH, CA

is recognized under the National Voluntary Laboratory Accreditation Program for satisfactory compliance with criteria established in Title 15, Part 7 Code of Federal Regulations. Accreditation is awarded for specific services, listed on the Scope of Accreditation, for:

BULK ASBESTOS FIBER ANALYSIS

January 1, 1993
Effective until

DEPARTMENT OF COMMERCE · UNITED STATES OF AMERICA

For the National Institute of Standards and Technology

NVLAP LAB CODE: 1884

EPA Accredited AHERA Approved

OCCUTRAIN

OCCUPATIONAL TRAINING INSTITUTE, INC.

BE IT KNOWN TO ALL THAT
WILFRED NWAGBOSO
SS# 444-74-1952

HAS SUCCESSFULLY COMPLETED A 1 / 2 DAY COURSE AND, AFTER PASSING

THE REQUIRED EXAMINATION, IS AWARDED THIS CERTIFICATE

ON

MARCH 5, 1993
FOR

INSPECTING BUILDING

FOR ASBESTOS

Annual Refresher course

IBFA-R-210-93
ACCREDITATION NO.

MARCH 5, 1994
EXPIRATION DATE

OCCUPATIONAL TRAINING INSTITUTE
COURSE
PER
STUDIUM

Charles E. Goldshall
EXECUTIVE DIRECTOR

David E. Eaton
EXAM ADMINISTRATOR

For purposes of accreditation required under section 206 of the Toxic Substances Control Act (TSCA)
Occupational Training Institute, Inc.-(Occutrain)-200 Baker Street Ste. # 205 Costa Mesa, CA 92626-Ph: 714 556-7844

A.H.E.R.A. ACCREDITED

00408
CERTIFICATE NUMBER

NATIONAL ENVIRONMENTAL

TRAINING FOR HAZARDOUS MATERIALS AND ASBESTOS

1019 W. Manchester Blvd., Inglewood, CA 90301
In Calif. (800) 544-8323 • (213) 645-4516 • Fax (213) 645-0148

This is to certify that

WILLIE NWAGBOSO

444-74-1952

HAS SUCCESSFULLY COMPLETED THE COURSE AND PASSED THE EXAMINATION FOR MANAGEMENT PLANNER AS PRESCRIBED BY THE ENVIRONMENTAL PROTECTION AGENCY FOR PRACTICES AND PROCEDURES IN ASBESTOS ABATEMENT.

AUGUST 20-21, 1992
TRAINING DATE

AUGUST 21, 1992
EXAMINATION DATE

AUGUST 20, 1993
EXPIRATION DATE

James McFarland
Program Director
NATIONAL ENVIRONMENTAL

APPENDIX C

PRIMARY LABORATORY

CONCORD ANALYSIS, INC.

9960 Canoga Ave., Suite D8, Chatsworth, Ca 91311 Tel:(818)407-012

BULK SAMPLE ANALYTICAL RESULT

Cape Environmental Management, Inc.
20280 S. Vermont Ave., Suite 225
Torrance, Ca 90502

JOB SITE: *Webster*
RECEIVE DATE: *7-31-92* REPORT DATE : *8-05-92*

FIELD # / LAB #	LOCATION/ MATERIAL	TYPE & PERCENT OF ASBESTOS		OTHER MATERIAL IN SAMPLE FIBROUS(%). / NONFIBROUS		
W.01.01		CHRYSOTILE	*4.0%*	*Cellulose*		*Calcite*
		AMOSITE	*Not-Det.*			*Quartz*
L1820731	*Floor Tile*	OTHER:	*Not-Det.*			*Glass*
-01		TYPE:				*Lizardite*
COLOR: *Brown*		TOTAL ABS.:	*4.0%*	NONASB	*1.0%*	*Binder*
W.01.01		CHRYSOTILE	*Not-Det.*	*Cellulose*		*Calcite*
		AMOSITE	*Not-Det.*			*Quartz*
L1820731	*Mastic*	OTHER:	*Not-Det.*			*Glass*
-01A		TYPE:				*Binder*
COLOR: *Black*		TOTAL ABS.:	*Not-Det.*	NONASB	*2.0%*	*Accessory*
W.02.01		CHRYSOTILE	*5.0%*	*Cellulose*		*Calcite*
		AMOSITE	*Not-Det.*			*Quartz*
L1820731	*Floor Tile*	OTHER:	*Not-Det.*			*Glass*
-02		TYPE:				*Lizardite*
COLOR: *Brown*		TOTAL ABS.:	*5.0%*	NONASB	*1.0%*	*Binder*
W.02.01		CHRYSOTILE	*2.0%*	*Cellulose*		*Calcite*
		AMOSITE	*Not-Det.*			*Quartz*
L1820731	*Mastic*	OTHER:	*Not-Det.*			*Glass*
-02A		TYPE:				*Binder*
COLOR: *Black*		TOTAL ABS.:	*2.0%*	NONASB	*2.0%*	*Accessory*

Remark:

(1) Analytical method: 40 CFR Part 763, subpart F, Appendix A. "Interim Method for the Determination of Asbestos in Bulk Insulation Samples".

(2) Test report pertains only to the sample and sampling data submitted by the client.

(3) If no asbestos detected in Floor Tile by this method, suggest analyzing by TEM.

(4) If sample is inhomogeneous, subsamples will be taken and analyse seperately

Authorized Signature

CONCORD ANALYSIS, INC.

9960 Canoga Ave., Suite D8, Chatsworth, Ca 91311 Tel:(818)407-0128

BULK SAMPLE ANALYTICAL RESULT

Cape Environmental Management, Inc.
20280 S. Vermont Ave., Suite 225
Torrance, Ca 90502

JOB SITE: *Webster*
RECEIVE DATE: *7-31-92* REPORT DATE : *8-05-92*

FIELD # / LAB #	LOCATION/ MATERIAL	TYPE & PERCENT OF ASBESTOS		OTHER MATERIAL IN SAMPLE FIBROUS(%). / NONFIBROUS	
W.03.01		CHRYSOTILE	*5.0%*	*Cellulose*	*Calcite*
		AMOSITE	*Not-Det.*		*Quartz*
L1820731	*Floor Tile*	OTHER:	*Not-Det.*		*Glass*
-03		TYPE:			*Lizardite*
COLOR: *White*		TOTAL ABS.:	*5.0%*	NONASB *1.0%*	*Binder*
W.03.01		CHRYSOTILE	*Not-Det.*	*Cellulose*	*Calcite*
		AMOSITE	*Not-Det.*		*Quartz*
L1820731	*Mastic*	OTHER:	*Not-Det.*		*Glass*
-03A		TYPE:			*Binder*
COLOR: *Orange*		TOTAL ABS.:	*Not-Det.*	NONASB *1.0%*	*Accessory*
W.04.01		CHRYSOTILE	*5.0%*	*Cellulose*	*Calcite*
		AMOSITE	*Not-Det.*		*Quartz*
L1820731	*Floor Tile*	OTHER:	*Not-Det.*		*Glass*
-04		TYPE:			*Feldspar*
COLOR: *Tan*		TOTAL ABS.:	*5.0%*	NONASB *1.0%*	*Binder*
W.04.01		CHRYSOTILE	*3.0%*	*Cellulose*	*Calcite*
		AMOSITE	*Not-Det.*		*Quartz*
L1820731	*Mastic*	OTHER:	*Not-Det.*		*Glass*
-04A		TYPE:			*Binder*
COLOR: *Black*		TOTAL ABS.:	*3.0%*	NONASB *1.0%*	*Accessory*

Remark:

(1) Analytical method: 40 CFR Part 763, subpart F, Appendix A. "Interim Method for the Determination of Asbestos in Bulk Insulation Samples".

(2) Test report pertains only to the sample and sampling data submitted by the client.

(3) If no asbestos detected in Floor Tile by this method, suggest analyzing by TEM.

(4) If sample is inhomogeneous, subsamples will be taken and analyse seperately

Authorized Signature

CONCORD ANALYSIS, INC.

9960 Canoga Ave., Suite D8, Chatsworth, Ca 91311 Tel:(818)407-012

BULK SAMPLE ANALYTICAL RESULT

Cape Environmental Management, Inc.
20280 S. Vermont Ave., Suite 225
Torrance, Ca 90502

JOB SITE: *Webster*
RECEIVE DATE: *7-31-92* REPORT DATE : *8-05-92*

FIELD # / LAB #	LOCATION/ MATERIAL	TYPE & PERCENT OF ASBESTOS		OTHER MATERIAL IN SAMPLE FIBROUS(%)		/ NONFIBROUS
W.05.01		CHRYSOTILE	*7.0%*	*Cellulose*		*Calcite*
		AMOSITE	*Not-Det.*			*Quartz*
L1820731	*Floor Tile*	OTHER:	*Not-Det.*			*Glass*
-05		TYPE:				*Binder*
COLOR: *Tan*		TOTAL ABS.:	*7.0%*	NONASB	*1.0%*	*Accessory*
W.05.01		CHRYSOTILE	*10.0%*	*Cellulose*		*Calcite*
		AMOSITE	*Not-Det.*			*Quartz*
L1820731	*Mastic*	OTHER:	*Not-Det.*			*Glass*
-05A		TYPE:				*Lizardite*
COLOR: *Black*		TOTAL ABS.:	*10.0%*	NONASB	*1.0%*	*Binder*
W.06.01		CHRYSOTILE	*3.0%*	*Cellulose*		*Calcite*
		AMOSITE	*Not-Det.*			*Quartz*
L1820731	*Floor Tile*	OTHER:	*Not-Det.*			*Glass*
-06		TYPE:				*Lizardite*
COLOR: *Brown*		TOTAL ABS.:	*3.0%*	NONASB	*1.0%*	*Binder*
W.06.01		CHRYSOTILE	*5.0%*	*Cellulose*		*Calcite*
		AMOSITE	*Not-Det.*			*Quartz*
L1820731	*Mastic*	OTHER:	*Not-Det.*			*Glass*
-06A		TYPE:				*Binder*
COLOR: *Black*		TOTAL ABS.:	*5.0%*	NONASB	*2.0%*	*Accessory*

Remark:
(1) Analytical method: 40 CFR Part 763, subpart F, Appendix A. "Interim Method for the Determination of Asbestos in Bulk Insulation Samples".
(2) Test report pertains only to the sample and sampling data submitted by the client.
(3) If no asbestos detected in Floor Tile by this method, suggest analyzing by TEM.
(4) If sample is inhomogeneous, subsamples will be taken and analyse seperately

Authorized Signature

CONCORD ANALYSIS, INC.

9960 Canoga Ave., Suite D8, Chatsworth, Ca 91311 Tel:(818)407-0128

BULK SAMPLE ANALYTICAL RESULT

Cape Environmental Management, Inc.
20280 S. Vermont Ave., Suite 225
Torrance, Ca 90502

JOB SITE: *Webster*
RECEIVE DATE: *7-31-92* REPORT DATE : *8-05-92*

FIELD # / LAB #	LOCATION/ MATERIAL	TYPE & PERCENT OF ASBESTOS		OTHER MATERIAL IN SAMPLE FIBROUS(%) / NONFIBROUS		
W.07.01		CHRYSOTILE	5.0%	Cellulose		Calcite
		AMOSITE	Not-Det.			Quartz
L1820731	Floor Tile	OTHER:	Not-Det.			Glass
-07		TYPE:				Binder
COLOR:	Gray	TOTAL ABS.:	5.0%	NONASB	1.0%	Accessory
W.07.01		CHRYSOTILE	10.0%	Cellulose		Calcite
		AMOSITE	Not-Det.			Quartz
L1820731	Mastic	OTHER:	Not-Det.			Glass
-07A		TYPE:				Binder
COLOR:	Black	TOTAL ABS.:	10.0%	NONASB	2.0%	Accessory
W.08.01		CHRYSOTILE	5.0%	Cellulose		Calcite
		AMOSITE	Not-Det.			Quartz
L1820731	Floor Tile	OTHER:	Not-Det.			Glass
-08		TYPE:				Lizardite
COLOR:	Gray	TOTAL ABS.:	5.0%	NONASB	1.0%	Binder
W.08.01		CHRYSOTILE	10.0%	Cellulose		Calcite
		AMOSITE	Not-Det.			Quartz
L1820731	Mastic	OTHER:	Not-Det.			Glass
-08A		TYPE:				Binder
COLOR:	Black	TOTAL ABS.:	10.0%	NONASB	2.0%	Accessory

Remark:
(1) Analytical method: 40 CFR Part 763, subpart F, Appendix A. "Interim Method for the Determination of Asbestos in Bulk Insulation Samples".
(2) Test report pertains only to the sample and sampling data submitted by the client.
(3) If no asbestos detected in Floor Tile by this method, suggest analyzing by TEM.
(4) If sample is inhomogeneous, subsamples will be taken and analyse seperately

Authorized Signature

CONCORD ANALYSIS, INC.

9960 Canoga Ave., Suite D8, Chatsworth, Ca 91311 Tel:(818)407-012

BULK SAMPLE ANALYTICAL RESULT

Cape Environmental Management, Inc.
20280 S. Vermont Ave., Suite 225
Torrance, Ca 90502

JOB SITE: *Webster*
RECEIVE DATE: *7-31-92* **REPORT DATE :** *8-05-92*

FIELD # / LAB #	LOCATION/ MATERIAL	TYPE & PERCENT OF ASBESTOS		OTHER MATERIAL IN SAMPLE FIBROUS(%) / NONFIBROUS		
W.09.01		CHRYSOTILE	Trace	Cellulose		Calcite
		AMOSITE	Not-Det.			Quartz
L1820731	Floor Tile	OTHER:	Not-Det.			Glass
-09		TYPE:				Binder
COLOR:	Tan	TOTAL ABS.:	Trace	NONASB	1.0%	Accessory
W.09.01		CHRYSOTILE	5.0%	Cellulose		Calcite
		AMOSITE	Not-Det.			Quartz
L1820731	Mastic	OTHER:	Not-Det.			Glass
-09A		TYPE:				Binder
COLOR:	Black,Orange	TOTAL ABS.:	5.0%	NONASB	2.0%	Accessory
W.10.01		CHRYSOTILE	Not-Det.	Cellulose		Calcite
		AMOSITE	Not-Det.	Gypsum		Quartz
L1820731	Roof Material	OTHER:	Not-Det.			Glass
-10		TYPE:				Binder
COLOR:	White	TOTAL ABS.:	Not-Det.	NONASB	50.0%	Accessory
W.10.02		CHRYSOTILE	Not-Det.	Cellulose		Calcite
		AMOSITE	Not-Det.	Glass		Quartz
L1820731		OTHER:	Not-Det.	Gypsum		Glass
-11		TYPE:				Biotite
COLOR:	White	TOTAL ABS.:	Not-Det.	NONASB	70.0%	Binder

Remark:
(1) Analytical method: 40 CFR Part 763, subpart F, Appendix A. "Interim Method for the Determination of Asbestos in Bulk Insulation Samples".
(2) Test report pertains only to the sample and sampling data submitted by the client.
(3) If no asbestos detected in Floor Tile by this method, suggest analyzing by TEM.
(4) If sample is inhomogeneous, subsamples will be taken and analyse seperately

Authorized Signature

CONCORD ANALYSIS, INC.

9960 Canoga Ave., Suite D8, Chatsworth, Ca 91311 Tel:(818)407-012

BULK SAMPLE ANALYTICAL RESULT

Cape Environmental Management, Inc.
20280 S. Vermont Ave., Suite 225
Torrance, Ca 90502

JOB SITE: *Webster*
RECEIVE DATE: *7-31-92* REPORT DATE : *8-05-92*

FIELD # / LAB #	LOCATION/ MATERIAL	TYPE & PERCENT OF ASBESTOS		OTHER MATERIAL IN SAMPLE FIBROUS(%)		/ NONFIBROUS
W.10.03		CHRYSOTILE	*Not-Det.*	*Cellulose*		*Calcite*
		AMOSITE	*Not-Det.*	*Gypsum*		*Quartz*
L1820731		OTHER:	*Not-Det.*			*Glass*
-12		TYPE:				*Binder*
COLOR: *White*		TOTAL ABS.:	*Not-Det.*	NONASB	*60.0%*	*Accessory*
W.10.04		CHRYSOTILE	*Trace*	*Cellulose*		*Calcite*
		AMOSITE	*Not-Det.*	*Gypsum*		*Quartz*
L1820731		OTHER:	*Not-Det.*			*Glass*
-13		TYPE:				*Binder*
COLOR: *White,Beige*		TOTAL ABS.:	*Trace*	NONASB	*50.0%*	*Accessory*
W.10.05		CHRYSOTILE	*Not-Det.*	*Cellulose*		*Calcite*
		AMOSITE	*Not-Det.*	*Gypsum*		*Quartz*
L1820731		OTHER:	*Not-Det.*			*Glass*
-14		TYPE:				*Binder*
COLOR: *White*		TOTAL ABS.:	*Not-Det.*	NONASB	*80.0%*	*Accessory*
W.11.01		CHRYSOTILE	*Not-Det.*	*Cellulose*		*Calcite*
		AMOSITE	*Not-Det.*	*Glass*		*Quartz*
L1820731		OTHER:	*Not-Det.*	*Gypsum*		*Glass*
-15		TYPE:				*Binder*
COLOR: *White*		TOTAL ABS.:	*Not-Det.*	NONASB	*90.0%*	*Accessory*

Remark:

(1) Analytical method: 40 CFR Part 763, subpart F, Appendix A. "Interim Method for the Determination of Asbestos in Bulk Insulation Samples".

(2) Test report pertains only to the sample and sampling data submitted by the client.

(3) If no asbestos detected in Floor Tile by this method, suggest analyzing by TEM.

(4) If sample is inhomogeneous, subsamples will be taken and analyse seperately

Authorized Signature

CONCORD ANALYSIS, INC.

9960 Canoga Ave., Suite D8, Chatsworth, Ca 91311 Tel:(818)407-012

BULK SAMPLE ANALYTICAL RESULT

Cape Environmental Management, Inc.
20280 S. Vermont Ave., Suite 225
Torrance, Ca 90502

JOB SITE: *Webster*
RECEIVE DATE: *7-31-92* REPORT DATE : *8-05-92*

FIELD # / LAB #	LOCATION/ MATERIAL	TYPE & PERCENT OF ASBESTOS		OTHER MATERIAL IN SAMPLE FIBROUS(%)	/ NONFIBROUS
W.11.02		CHRYSOTILE	*Not-Det.*	*Cellulose*	*Calcite*
		AMOSITE	*Not-Det.*	*Gypsum*	*Quartz*
L1820731		OTHER:	*Not-Det.*		*Glass*
-16		TYPE:			*Binder*
COLOR: *White,Beige*		TOTAL ABS.:	*Not-Det.*	NONASB *90.0%*	*Accessory*
W.11.03		CHRYSOTILE	*Not-Det.*	*Cellulose*	*Calcite*
		AMOSITE	*Not-Det.*	*Mineral Wool*	*Quartz*
L1820731		OTHER:	*Not-Det.*	*Gypsum*	*Glass*
-17		TYPE:			*Binder*
COLOR: *White*		TOTAL ABS.:	*Not-Det.*	NONASB *90.0%*	*Accessory*
W.11.04		CHRYSOTILE	*Not-Det.*	*Cellulose*	*Calcite*
		AMOSITE	*Not-Det.*	*Gypsum*	*Quartz*
L1820731		OTHER:	*Not-Det.*		*Glass*
-18		TYPE:			*Binder*
COLOR: *White*		TOTAL ABS.:	*Not-Det.*	NONASB *90.0%*	*Accessory*
W.11.05		CHRYSOTILE	*Not-Det.*	*Cellulose*	*Calcite*
		AMOSITE	*Not-Det.*	*Gypsum*	*Quartz*
L1820731		OTHER:	*Not-Det.*		*Glass*
-19		TYPE:			*Binder*
COLOR: *White*		TOTAL ABS.:	*Not-Det.*	NONASB *70.0%*	*Accessory*

Remark:

(1) Analytical method: 40 CFR Part 763, subpart F, Appendix A. "Interim Method for the Determination of Asbestos in Bulk Insulation Samples".

(2) Test report pertains only to the sample and sampling data submitted by the client.

(3) If no asbestos detected in Floor Tile by this method, suggest analyzing by TEM.

(4) If sample is inhomogeneous, subsamples will be taken and analyse seperately

Shan

Authorized Signature

CONCORD ANALYSIS, INC.

9960 Canoga Ave., Suite D8, Chatsworth, Ca 91311 Tel:(818)407-012

BULK SAMPLE ANALYTICAL RESULT

Cape Environmental Management, Inc.
20280 S. Vermont Ave., Suite 225
Torrance, Ca 90502

JOB SITE: *Webster*
RECEIVE DATE: *7-31-92* REPORT DATE : *8-05-92*

FIELD # / LAB #	LOCATION/ MATERIAL	TYPE & PERCENT OF ASBESTOS	OTHER MATERIAL IN SAMPLE FIBROUS(%)	/ NONFIBROUS
W.12.01		CHRYSOTILE *Not-Det.*	*Cellulose*	*Calcite*
		AMOSITE *Not-Det.*		*Glass*
L1820731		OTHER: *Not-Det.*		*Binder*
-20		TYPE:		*Accessory*
COLOR: *White,Brown*		TOTAL ABS.:*Not-Det.*	NONASB *95.0%*	
W.12.02		CHRYSOTILE *Not-Det.*	*Cellulose*	*Calcite*
		AMOSITE *Not-Det.*		*Quartz*
L1820731		OTHER: *Not-Det.*		*Binder*
-21		TYPE:		*Accessory*
COLOR: *White,Brown*		TOTAL ABS.:*Not-Det.*	NONASB *95.0%*	
W.12.03		CHRYSOTILE *Not-Det.*	*Cellulose*	*Calcite*
		AMOSITE *Not-Det.*		*Glass*
L1820731		OTHER: *Not-Det.*		*Binder*
-22		TYPE:		*Accessory*
COLOR: *White,Brown*		TOTAL ABS.:*Not-Det.*	NONASB *90.0%*	
W.13.01		CHRYSOTILE *Not-Det.*	*Cellulose*	*Calcite*
		AMOSITE *Not-Det.*	*Mineral Wool*	*Quartz*
L1820731		OTHER: *Not-Det.*	*Fiber*	*Glass*
-23		TYPE:		*Binder*
COLOR: *White*		TOTAL ABS.:*Not-Det.*	NONASB *90.0%*	*Accessory*

Remark:

(1) Analytical method: 40 CFR Part 763, subpart F, Appendix A. "Interim Method for the Determination of Asbestos in Bulk Insulation Samples".

(2) Test report pertains only to the sample and sampling data submitted by the client.

(3) If no asbestos detected in Floor Tile by this method, suggest analyzing by TEM.

(4) If sample is inhomogeneous, subsamples will be taken and analyse seperately

Authorized Signature

CONCORD ANALYSIS, INC.

9960 Canoga Ave., Suite D8, Chatsworth, Ca 91311 Tel:(818)407-012

BULK SAMPLE ANALYTICAL RESULT

Cape Environmental Management, Inc.
20280 S. Vermont Ave., Suite 225
Torrance, Ca 90502

JOB SITE: *Webster*
RECEIVE DATE: *7-31-92* **REPORT DATE :** *8-05-92*

FIELD # / LAB #	LOCATION/ MATERIAL	TYPE & PERCENT OF ASBESTOS		OTHER MATERIAL IN SAMPLE FIBROUS(%)	/ NONFIBROUS
W.13.02		CHRYSOTILE	*Not-Det.*	*Cellulose*	*Calcite*
		AMOSITE	*Not-Det.*	*Mineral Wool*	*Quartz*
L1820731		OTHER:	*Not-Det.*	*Fiber*	*Glass*
-24		TYPE:			*Binder*
COLOR: *White*		TOTAL ABS.:	*Not-Det.*	NONASB *90.0%*	*Accessory*
W.13.03		CHRYSOTILE	*Not-Det.*	*Cellulose*	*Calcite*
		AMOSITE	*Not-Det.*	*Mineral Wool*	*Quartz*
L1820731		OTHER:	*Not-Det.*	*Fiber*	*Glass*
-25		TYPE:			*Binder*
COLOR: *White*		TOTAL ABS.:	*Not-Det.*	NONASB *90.0%*	*Accessory*
W.14.01		CHRYSOTILE	*Not-Det.*	*Cellulose*	*Calcite*
		AMOSITE	*Not-Det.*	*Mineral Wool*	*Quartz*
L1820731		OTHER:	*Not-Det.*		*Glass*
-26		TYPE:			*Binder*
COLOR: *White,Brown*		TOTAL ABS.:	*Not-Det.*	NONASB *30.0%*	*Accessory*
W.14.02		CHRYSOTILE	*Not-Det.*	*Cellulose*	*Calcite*
		AMOSITE	*Not-Det.*	*Mineral Wool*	*Quartz*
L1820731		OTHER:	*Not-Det.*		*Glass*
-27		TYPE:			*Binder*
COLOR: *White,Brown*		TOTAL ABS.:	*Not-Det.*	NONASB *15.0%*	*Accessory*

Remark:
(1) Analytical method: 40 CFR Part 763, subpart F, Appendix A. "Interim Method for the Determination of Asbestos in Bulk Insulation Samples".
(2) Test report pertains only to the sample and sampling data submitted by the client.
(3) If no asbestos detected in Floor Tile by this method, suggest analyzing by TEM.
(4) If sample is inhomogeneous, subsamples will be taken and analyse seperately

Authorized Signature

CONCORD ANALYSIS, INC.

9960 Canoga Ave., Suite D8, Chatsworth, Ca 91311 Tel:(818)407-012

BULK SAMPLE ANALYTICAL RESULT

Cape Environmental Management, Inc.
20280 S. Vermont Ave., Suite 225
Torrance, Ca 90502

JOB SITE: *Webster*
RECEIVE DATE: *7-31-92* **REPORT DATE :** *8-05-92*

FIELD # / LAB #	LOCATION/ MATERIAL	TYPE & PERCENT OF ASBESTOS		OTHER MATERIAL IN SAMPLE FIBROUS(%) / NONFIBROUS	
W.14.03		CHRYSOTILE	*Not-Det.*	*Cellulose*	*Calcite*
		AMOSITE	*Not-Det.*	*Mineral Wool*	*Quartz*
L1820731		OTHER:	*Not-Det.*		*Glass*
-28		TYPE:			*Binder*
COLOR: *White,Brown*		TOTAL ABS.:	*Not-Det.*	**NONASB** *15.0%*	*Accessory*
W.15.01		CHRYSOTILE	*Not-Det.*	*Cellulose*	*Calcite*
		AMOSITE	*Not-Det.*		*Quartz*
L1820731		OTHER:	*Not-Det.*		*Glass*
-29		TYPE:			*Binder*
COLOR: *White,Brown*		TOTAL ABS.:	*Not-Det.*	**NONASB** *95.0%*	*Accessory*
W.15.02		CHRYSOTILE	*Not-Det.*	*Cellulose*	*Glass*
		AMOSITE	*Not-Det.*		*Binder*
L1820731		OTHER:	*Not-Det.*		*Accessory*
-30		TYPE:			
COLOR: *White,Brown*		TOTAL ABS.:	*Not-Det.*	**NONASB** *95.0%*	
W.15.03		CHRYSOTILE	*Not-Det.*	*Cellulose*	*Calcite*
		AMOSITE	*Not-Det.*		*Glass*
L1820731		OTHER:	*Not-Det.*		*Binder*
-31		TYPE:			*Accessory*
COLOR: *White,Brown*		TOTAL ABS.:	*Not-Det.*	**NONASB** *95.0%*	

Remark:

(1) Analytical method: 40 CFR Part 763, subpart F, Appendix A. "Interim Method for the Determination of Asbestos in Bulk Insulation Samples".

(2) Test report pertains only to the sample and sampling data submitted by the client.

(3) If no asbestos detected in Floor Tile by this method, suggest analyzing by TEM.

(4) If sample is inhomogeneous, subsamples will be taken and analyse seperately

Authorized Signature

CONCORD ANALYSIS, INC.

9960 Canoga Ave., Suite D8, Chatsworth, Ca 91311 Tel:(818)407-0128

BULK SAMPLE ANALYTICAL RESULT

Cape Environmental Management, Inc.
20280 S. Vermont Ave., Suite 225
Torrance, Ca 90502

JOB SITE: *Webster*
RECEIVE DATE: *7-31-92* REPORT DATE : *8-05-92*

FIELD # / LAB #	LOCATION/ MATERIAL	TYPE & PERCENT OF ASBESTOS		OTHER MATERIAL IN SAMPLE FIBROUS(%)	/ NONFIBROUS
W.16.01		CHRYSOTILE	*Not-Det.*	*Cellulose*	*Glass*
		AMOSITE	*Not-Det.*		*Binder*
L1820731		OTHER:	*Not-Det.*		*Accessory*
-32		TYPE:			
COLOR: *Brown*		TOTAL ABS.:	*Not-Det.*	NONASB *10.0%*	
W.16.02		CHRYSOTILE	*Not-Det.*	*Cellulose*	*Calcite*
		AMOSITE	*Not-Det.*		*Quartz*
L1820731		OTHER:	*Not-Det.*		*Glass*
-33		TYPE:			*Vermiculite*
COLOR: *Brown*		TOTAL ABS.:	*Not-Det.*	NONASB *10.0%*	*Feldspar*
W.16.03		CHRYSOTILE	*Not-Det.*	*Cellulose*	*Glass*
		AMOSITE	*Not-Det.*		*Binder*
L1820731		OTHER:	*Not-Det.*		*Accessory*
-34		TYPE:			
COLOR: *Brown*		TOTAL ABS.:	*Not-Det.*	NONASB *30.0%*	
W.17.01		CHRYSOTILE	*Not-Det.*	*Cellulose*	*Calcite*
		AMOSITE	*Not-Det.*		*Glass*
L1820731		OTHER:	*Not-Det.*		*Binder*
-35		TYPE:			*Accessory*
COLOR: *White,Brown*		TOTAL ABS.:	*Not-Det.*	NONASB *35.0%*	

Remark:
(1) Analytical method: 40 CFR Part 763, subpart F, Appendix A. "Interim Method for the Determination of Asbestos in Bulk Insulation Samples".
(2) Test report pertains only to the sample and sampling data submitted by the client.
(3) If no asbestos detected in Floor Tile by this method, suggest analyzing by TEM.
(4) If sample is inhomogeneous, subsamples will be taken and analyse seperately

Authorized Signature

CONCORD ANALYSIS, INC.

9960 Canoga Ave., Suite D8, Chatsworth, Ca 91311 Tel:(818)407-012

BULK SAMPLE ANALYTICAL RESULT

Cape Environmental Management, Inc.
20280 S. Vermont Ave., Suite 225
Torrance, Ca 90502

JOB SITE: *Webster*
RECEIVE DATE: *7-31-92* REPORT DATE : *8-05-92*

FIELD # / LAB #	LOCATION/ MATERIAL	TYPE & PERCENT OF ASBESTOS		OTHER MATERIAL IN SAMPLE FIBROUS(%)	/ NONFIBROUS
W.17.02		CHRYSOTILE	*Not-Det.*	*Cellulose*	*Calcite*
		AMOSITE	*Not-Det.*		*Glass*
L1820731		OTHER:	*Not-Det.*		*Binder*
-36		TYPE:			*Accessory*
COLOR: *White,Brown*		TOTAL ABS.:	*Not-Det.*	NONASB *95.0%*	
W.17.03		CHRYSOTILE	*Not-Det.*	*Cellulose*	*Calcite*
		AMOSITE	*Not-Det.*		*Glass*
L1820731		OTHER:	*Not-Det.*		*Binder*
-37		TYPE:			*Accessory*
COLOR: *White,Brown*		TOTAL ABS.:	*Not-Det.*	NONASB *90.0%*	
W.18.01		CHRYSOTILE	*Not-Det.*	*Cellulose*	*Calcite*
		AMOSITE	*Not-Det.*	*Mineral Wool*	*Perlite*
L1820731		OTHER:	*Not-Det.*		*Binder*
-38		TYPE:			*Accessory*
COLOR: *White,Gray*		TOTAL ABS.:	*Not-Det.*	NONASB *60.0%*	
W.18.02		CHRYSOTILE	*Not-Det.*	*Cellulose*	*Calcite*
		AMOSITE	*Not-Det.*	*Mineral Wool*	*Glass*
L1820731		OTHER:	*Not-Det.*		*Binder*
-39		TYPE:			*Accessory*
COLOR: *White,Gray*		TOTAL ABS.:	*Not-Det.*	NONASB *90.0%*	

Remark:

(1) Analytical method: 40 CFR Part 763, subpart F, Appendix A. "Interim Method for the Determination of Asbestos in Bulk Insulation Samples".

(2) Test report pertains only to the sample and sampling data submitted by the client.

(3) If no asbestos detected in Floor Tile by this method, suggest analyzing by TEM.

(4) If sample is inhomogeneous, subsamples will be taken and analyse seperately

Authorized Signature

CONCORD ANALYSIS, INC.

9960 Canoga Ave., Suite D8, Chatsworth, Ca 91311 Tel:(818)407-012

BULK SAMPLE ANALYTICAL RESULT

Cape Environmental Management, Inc.
20280 S. Vermont Ave., Suite 225
Torrance, Ca 90502

JOB SITE: *Wesbter*
RECEIVE DATE: *7-31-92* **REPORT DATE :** *8-06-92*

FIELD # / LAB #	LOCATION/ MATERIAL	TYPE & PERCENT OF ASBESTOS		OTHER MATERIAL IN SAMPLE FIBROUS(%)	/ NONFIBROUS
W.18.03		CHRYSOTILE	*Not-Det.*	*Cellulose*	*Calcite*
		AMOSITE	*Not-Det.*	*Mineral Wool*	*Perlite*
L1820731		OTHER:	*Not-Det.*		*Binder*
-40		TYPE:			*Accessory*
COLOR: *White,Gray*		TOTAL ABS.:	*Not-Det.*	NONASB *60.0%*	
W.19.01		CHRYSOTILE	*Not-Det.*	*Cellulose*	*Calcite*
		AMOSITE	*Not-Det.*	*Gypsum*	*Quartz*
L1820731		OTHER:	*Not-Det.*		*Glass*
-41		TYPE:			*Vermiculite*
COLOR: *White,Brown*		TOTAL ABS.:	*Not-Det.*	NONASB *10.0%*	*Binder*
W.19.02		CHRYSOTILE	*3.0%*	*Cellulose*	*Calcite*
		AMOSITE	*Not-Det.*	*Mineral Wool*	*Glass*
L1820731		OTHER:	*Not-Det.*		*Binder*
-42		TYPE:			*Accessory*
COLOR: *Brown*		TOTAL ABS.:	*3.0%*	NONASB *5.0%*	
W.19.03		CHRYSOTILE	*Not-Det.*	*Cellulose*	*Calcite*
		AMOSITE	*Not-Det.*	*Mineral Wool*	*Glass*
L1820731		OTHER:	*Not-Det.*		*Binder*
-43		TYPE:			*Accessory*
COLOR: *White,Brown*		TOTAL ABS.:	*Not-Det.*	NONASB *15.0%*	

Remark:
(1) Analytical method: 40 CFR Part 763, subpart F, Appendix A. "Interim Method for the Determination of Asbestos in Bulk Insulation Samples".
(2) Test report pertains only to the sample and sampling data submitted by the client.
(3) If no asbestos detected in Floor Tile by this method, suggest analyzing by TEM.
(4) If sample is inhomogeneous, subsamples will be taken and analyse seperately

Authorized Signature

CONCORD ANALYSIS, INC.

9960 Canoga Ave., Suite D8, Chatsworth, Ca 91311 Tel:(818)407-0128

BULK SAMPLE ANALYTICAL RESULT

Cape Environmental Management, Inc.
20280 S. Vermont Ave., Suite 225
Torrance, Ca 90502

JOB SITE: *Wesbter*
RECEIVE DATE: *7-31-92* REPORT DATE : *8-06-92*

FIELD # / LAB #	LOCATION/ MATERIAL	TYPE & PERCENT OF ASBESTOS		OTHER MATERIAL IN SAMPLE FIBROUS(%) / NONFIBROUS		
W.20.01		CHRYSOTILE	*Not-Det.*	*Cellulose*		*Calcite*
		AMOSITE	*Not-Det.*	*Gypsum*		*Quartz*
L1820731		OTHER:	*Not-Det.*			*Glass*
-44		TYPE:				*Vermiculite*
COLOR: *White*		TOTAL ABS.:	*Not-Det.*	NONASB	*70.0%*	*Feldspar*
W.20.02		CHRYSOTILE	*Not-Det.*	*Cellulose*		*Calcite*
		AMOSITE	*Not-Det.*	*Mineral Wool*		*Quartz*
L1820731		OTHER:	*Not-Det.*	*Gypsum*		*Glass*
-45		TYPE:				*Vermiculite*
COLOR: *White*		TOTAL ABS.:	*Not-Det.*	NONASB	*60.0%*	*Binder*
W.20.03		CHRYSOTILE	*Not-Det.*	*Cellulose*		*Calcite*
		AMOSITE	*Not-Det.*	*Gypsum*		*Quartz*
L1820731		OTHER:	*Not-Det.*			*Glass*
-46		TYPE:				*Feldspar*
COLOR: *White*		TOTAL ABS.:	*Not-Det.*	NONASB	*60.0%*	*Binder*
W.20.04		CHRYSOTILE	*Not-Det.*	*Cellulose*		*Calcite*
		AMOSITE	*Not-Det.*	*Gypsum*		*Quartz*
L1820731		OTHER:	*Not-Det.*	*Fiber*		*Glass*
-47		TYPE:				*Vermiculite*
COLOR: *Beige*		TOTAL ABS.:	*Not-Det.*	NONASB	*60.0%*	*Feldspar*

Remark:
(1) Analytical method: 40 CFR Part 763, subpart F, Appendix A. "Interim Method for the Determination of Asbestos in Bulk Insulation Samples".
(2) Test report pertains only to the sample and sampling data submitted by the client.
(3) If no asbestos detected in Floor Tile by this method, suggest analyzing by TEM.
(4) If sample is inhomogeneous, subsamples will be taken and analyse seperately

Authorized Signature

CONCORD ANALYSIS, INC.

9960 Canoga Ave., Suite D8, Chatsworth, Ca 91311 Tel:(818)407-012

BULK SAMPLE ANALYTICAL RESULT

Cape Environmental Management, Inc.
20280 S. Vermont Ave., Suite 225
Torrance, Ca 90502

JOB SITE: *Wesbter*
RECEIVE DATE: *7-31-92* REPORT DATE : *8-06-92*

FIELD # / LAB #	LOCATION/ MATERIAL	TYPE & PERCENT OF ASBESTOS		OTHER MATERIAL IN SAMPLE FIBROUS(%)		/ NONFIBROUS
W.20.05		CHRYSOTILE	*Not-Det.*	*Cellulose*		*Calcite*
		AMOSITE	*Not-Det.*	*Gypsum*		*Quartz*
L1820731		OTHER:	*Not-Det.*			*Glass*
-48		TYPE:				*Feldspar*
COLOR: *Beige*		TOTAL ABS.:	*Not-Det.*	NONASB	*50.0%*	*Binder*
W.20.06		CHRYSOTILE	*Not-Det.*	*Cellulose*		*Calcite*
		AMOSITE	*Not-Det.*			*Quartz*
L1820731		OTHER:	*Not-Det.*			*Glass*
-49		TYPE:				*Binder*
COLOR: *White,Gray*		TOTAL ABS.:	*Not-Det.*	NONASB	*2.0%*	*Accessory*
W.20.07		CHRYSOTILE	*Not-Det.*	*Cellulose*		*Calcite*
		AMOSITE	*Not-Det.*	*Gypsum*		*Quartz*
L1820731		OTHER:	*Not-Det.*			*Glass*
-50		TYPE:				*Biotite*
COLOR: *Beige*		TOTAL ABS.:	*Not-Det.*	NONASB	*50.0%*	*Binder*
W.21.01		CHRYSOTILE	*Trace*	*Cellulose*		*Calcite*
		AMOSITE	*Not-Det.*			*Quartz*
L1820731		OTHER:	*Not-Det.*			*Glass*
-51		TYPE:				*Biotite*
COLOR: *Gray*		TOTAL ABS.:	*Trace*	NONASB	*1.0%*	*Feldspar*

Remark:
(1) Analytical method: 40 CFR Part 763, subpart F, Appendix A. "Interim Method for the Determination of Asbestos in Bulk Insulation Samples".
(2) Test report pertains only to the sample and sampling data submitted by the client.
(3) If no asbestos detected in Floor Tile by this method, suggest analyzing by TEM.
(4) If sample is inhomogeneous, subsamples will be taken and analyse seperately

Authorized Signature

CONCORD ANALYSIS, INC.

9960 Canoga Ave., Suite D8, Chatsworth, Ca 91311 Tel:(818)407-012

BULK SAMPLE ANALYTICAL RESULT

Cape Environmental Management, Inc.
20280 S. Vermont Ave., Suite 225
Torrance, Ca 90502

JOB SITE: *Wesbter*
RECEIVE DATE: *7-31-92* REPORT DATE : *8-06-92*

FIELD # / LAB #	LOCATION/ MATERIAL	TYPE & PERCENT OF ASBESTOS		OTHER MATERIAL IN SAMPLE FIBROUS(%) / NONFIBROUS		
W.21.02		CHRYSOTILE	*Not-Det.*	*Cellulose*		*Calcite*
		AMOSITE	*Not-Det.*	*Gypsum*		*Quartz*
L1820731		OTHER:	*Not-Det.*			*Glass*
-52		TYPE:				*Biotite*
COLOR: *Gray*		TOTAL ABS.:	*Not-Det.*	NONASB	*50.0%*	*Binder*
W.21.03		CHRYSOTILE	*Not-Det.*	*Cellulose*		*Calcite*
		AMOSITE	*Not-Det.*			*Quartz*
L1820731		OTHER:	*Not-Det.*			*Glass*
-53		TYPE:				*Biotite*
COLOR: *Gray*		TOTAL ABS.:	*Not-Det.*	NONASB	*1.0%*	*Feldspar*
W.21.04		CHRYSOTILE	*Not-Det.*	*Cellulose*		*Quartz*
		AMOSITE	*Not-Det.*	*Gypsum*		*Glass*
L1820731		OTHER:	*Not-Det.*			*Biotite*
-54		TYPE:				*Feldspar*
COLOR: *White*		TOTAL ABS.:	*Not-Det.*	NONASB	*50.0%*	*Binder*
W.21.05		CHRYSOTILE	*Not-Det.*	*Cellulose*		*Quartz*
		AMOSITE	*Not-Det.*	*Gypsum*		*Glass*
L1820731		OTHER:	*Not-Det.*			*Biotite*
-55		TYPE:				*Feldspar*
COLOR: *Beige*		TOTAL ABS.:	*Not-Det.*	NONASB	*50.0%*	*Binder*

Remark:

(1) Analytical method: 40 CFR Part 763, subpart F, Appendix A. "Interim Method for the Determination of Asbestos in Bulk Insulation Samples".

(2) Test report pertains only to the sample and sampling data submitted by the client.

(3) If no asbestos detected in Floor Tile by this method, suggest analyzing by TEM.

(4) If sample is inhomogeneous, subsamples will be taken and analyse seperately

Authorized Signature

CONCORD ANALYSIS, INC.

9960 Canoga Ave., Suite D8, Chatsworth, Ca 91311 Tel:(818)407-012

BULK SAMPLE ANALYTICAL RESULT

Cape Environmental Management, Inc.
20280 S. Vermont Ave., Suite 225
Torrance, Ca 90502

JOB SITE: *Wesbter*
RECEIVE DATE: *7-31-92* REPORT DATE : *8-06-92*

FIELD # / LAB #	LOCATION/ MATERIAL	TYPE & PERCENT OF ASBESTOS		OTHER MATERIAL IN SAMPLE FIBROUS(%)	/ NONFIBROUS
W.21.06		CHRYSOTILE	*Not-Det.*	*Cellulose*	*Calcite*
		AMOSITE	*Not-Det.*	*Gypsum*	*Quartz*
L1820731		OTHER:	*Not-Det.*		*Glass*
-56		TYPE:			*Biotite*
COLOR: *Beige*		TOTAL ABS.:	*Not-Det.*	NONASB *50.0%*	*Binder*
W.21.07		CHRYSOTILE	*Not-Det.*	*Cellulose*	*Quartz*
		AMOSITE	*Not-Det.*	*Gypsum*	*Glass*
L1820731		OTHER:	*Not-Det.*		*Biotite*
-57		TYPE:			*Feldspar*
COLOR: *Beige*		TOTAL ABS.:	*Not-Det.*	NONASB *50.0%*	*Binder*
W.22.01		CHRYSOTILE	*Not-Det.*	*Cellulose*	*Quartz*
		AMOSITE	*Not-Det.*	*Gypsum*	*Glass*
L1820731		OTHER:	*Not-Det.*		*Biotite*
-58		TYPE:			*Feldspar*
COLOR: *Beige*		TOTAL ABS.:	*Not-Det.*	NONASB *50.0%*	*Binder*
W.22.02		CHRYSOTILE	*Not-Det.*	*Cellulose*	*Quartz*
		AMOSITE	*Not-Det.*	*Gypsum*	*Glass*
L1820731		OTHER:	*Not-Det.*		*Biotite*
-59		TYPE:			*Feldspar*
COLOR: *Beige*		TOTAL ABS.:	*Not-Det.*	NONASB *50.0%*	*Binder*

Remark:

(1) Analytical method: 40 CFR Part 763, subpart F, Appendix A. "Interim Method for the Determination of Asbestos in Bulk Insulation Samples".

(2) Test report pertains only to the sample and sampling data submitted by the client.

(3) If no asbestos detected in Floor Tile by this method, suggest analyzing by TEM.

(4) If sample is inhomogeneous, subsamples will be taken and analyse seperately

Authorized Signature

CONCORD ANALYSIS, INC.

9960 Canoga Ave., Suite D8, Chatsworth, Ca 91311 Tel:(818)407-012

BULK SAMPLE ANALYTICAL RESULT

Cape Environmental Management, Inc.
20280 S. Vermont Ave., Suite 225
Torrance, Ca 90502

JOB SITE: *Wesbter*
RECEIVE DATE: *7-31-92* REPORT DATE : *8-06-92*

FIELD # / LAB #	LOCATION/ MATERIAL	TYPE & PERCENT OF ASBESTOS		OTHER MATERIAL IN SAMPLE FIBROUS(%)		/ NONFIBROUS
W.22.03		CHRYSOTILE	*Not-Det.*	*Cellulose*		*Quartz*
		AMOSITE	*Not-Det.*	*Gypsum*		*Glass*
L1820731		OTHER:	*Not-Det.*			*Biotite*
-60		TYPE:				*Feldspar*
COLOR: *Beige*		TOTAL ABS.:	*Not-Det.*	NONASB	*40.0%*	*Binder*
W.22.04		CHRYSOTILE	*Not-Det.*	*Cellulose*		*Quartz*
		AMOSITE	*Not-Det.*	*Gypsum*		*Glass*
L1820731		OTHER:	*Not-Det.*			*Biotite*
-61		TYPE:				*Feldspar*
COLOR: *Beige*		TOTAL ABS.:	*Not-Det.*	NONASB	*40.0%*	*Binder*
W.22.05		CHRYSOTILE	*Not-Det.*	*Cellulose*		*Calcite*
		AMOSITE	*Not-Det.*	*Gypsum*		*Quartz*
L1820731		OTHER:	*Not-Det.*			*Perlite*
-62		TYPE:				*Biotite*
COLOR: *Beige*		TOTAL ABS.:	*Not-Det.*	NONASB	*30.0%*	*Feldspar*
W.23.01		CHRYSOTILE	*Not-Det.*	*Cellulose*		*Calcite*
		AMOSITE	*Not-Det.*	*Gypsum*		*Quartz*
L1820731		OTHER:	*Not-Det.*			*Glass*
-63		TYPE:				*Biotite*
COLOR: *Beige*		TOTAL ABS.:	*Not-Det.*	NONASB	*30.0%*	*Feldspar*

Remark:

(1) Analytical method: 40 CFR Part 763, subpart F, Appendix A. "Interim Method for the Determination of Asbestos in Bulk Insulation Samples".

(2) Test report pertains only to the sample and sampling data submitted by the client.

(3) If no asbestos detected in Floor Tile by this method, suggest analyzing by TEM.

(4) If sample is inhomogeneous, subsamples will be taken and analyse seperately

Authorized Signature

CONCORD ANALYSIS, INC.

9960 Canoga Ave., Suite D8, Chatsworth, Ca 91311 Tel:(818)407-0128

BULK SAMPLE ANALYTICAL RESULT

Cape Environmental Management, Inc.
20280 S. Vermont Ave., Suite 225
Torrance, Ca 90502

JOB SITE: *Wesbter*
RECEIVE DATE: *7-31-92* **REPORT DATE :** *8-06-92*

FIELD # / LAB #	LOCATION/ MATERIAL	TYPE & PERCENT OF ASBESTOS		OTHER MATERIAL IN SAMPLE FIBROUS(%)	/ NONFIBROUS
W.23.02		CHRYSOTILE	*Not-Det.*	*Cellulose*	*Calcite*
		AMOSITE	*Not-Det.*	*Gypsum*	*Quartz*
L1820731		OTHER:	*Not-Det.*		*Glass*
-64		TYPE:			*Biotite*
COLOR: *White,Beige*		TOTAL ABS.:	*Not-Det.*	NONASB *30.0%*	*Feldspar*
W.23.03		CHRYSOTILE	*Not-Det.*	*Cellulose*	*Calcite*
		AMOSITE	*Not-Det.*	*Gypsum*	*Quartz*
L1820731		OTHER:	*Not-Det.*		*Glass*
-65		TYPE:			*Biotite*
COLOR: *Beige*		TOTAL ABS.:	*Not-Det.*	NONASB *50.0%*	*Feldspar*
W.23.04		CHRYSOTILE	*Not-Det.*	*Cellulose*	*Calcite*
		AMOSITE	*Not-Det.*	*Gypsum*	*Quartz*
L1820731		OTHER:	*Not-Det.*		*Glass*
-66		TYPE:			*Biotite*
COLOR: *Beige*		TOTAL ABS.:	*Not-Det.*	NONASB *40.0%*	*Feldspar*
W.23.05		CHRYSOTILE	*Not-Det.*	*Cellulose*	*Quartz*
		AMOSITE	*Not-Det.*	*Gypsum*	*Glass*
L1820731		OTHER:	*Not-Det.*	*Fiber*	*Biotite*
-67		TYPE:			*Feldspar*
COLOR: *Beige*		TOTAL ABS.:	*Not-Det.*	NONASB *50.0%*	*Binder*

Remark:
(1) Analytical method: 40 CFR Part 763, subpart F, Appendix A. "Interim Method for the Determination of Asbestos in Bulk Insulation Samples".
(2) Test report pertains only to the sample and sampling data submitted by the client.
(3) If no asbestos detected in Floor Tile by this method, suggest analyzing by TEM.
(4) If sample is inhomogeneous, subsamples will be taken and analyse seperately

Authorized Signature

CONCORD ANALYSIS, INC.

9960 Canoga Ave., Suite D8, Chatsworth, Ca 91311 Tel:(818)407-012

BULK SAMPLE ANALYTICAL RESULT

Cape Environmental Management, Inc.
20280 S. Vermont Ave., Suite 225
Torrance, Ca 90502

JOB SITE: *Wesbter*
RECEIVE DATE: *7-31-92* REPORT DATE : *8-06-92*

FIELD # / LAB #	LOCATION/ MATERIAL	TYPE & PERCENT OF ASBESTOS	OTHER MATERIAL IN SAMPLE FIBROUS(%) / NONFIBROUS	
W.24.01		CHRYSOTILE *Not-Det.*	*Cellulose*	*Calcite*
		AMOSITE *Not-Det.*		*Quartz*
L1820731		OTHER: *Not-Det.*		*Glass*
-68		TYPE:		*Biotite*
COLOR: *White,Beige*		TOTAL ABS.:*Not-Det.*	NONASB 3.0%	*Binder*
W.24.02		CHRYSOTILE *Not-Det.*	*Cellulose*	*Calcite*
		AMOSITE *Not-Det.*		*Quartz*
L1820731		OTHER: *Not-Det.*		*Glass*
-69		TYPE:		*Biotite*
COLOR: *Gray*		TOTAL ABS.:*Not-Det.*	NONASB 2.0%	*Binder*
W.24.03		CHRYSOTILE *Not-Det.*	*Cellulose*	*Calcite*
		AMOSITE *Not-Det.*		*Quartz*
L1820731		OTHER: *Not-Det.*		*Glass*
-70		TYPE:		*Biotite*
COLOR: *White,Gray*		TOTAL ABS.:*Not-Det.*	NONASB 2.0%	*Feldspar*
W.24.04		CHRYSOTILE *Not-Det.*	*Cellulose*	*Calcite*
		AMOSITE *Not-Det.*		*Quartz*
L1820731		OTHER: *Not-Det.*		*Glass*
-71		TYPE:		*Biotite*
COLOR: *Gray*		TOTAL ABS.:*Not-Det.*	NONASB 2.0%	*Feldspar*

Remark:

(1) Analytical method: 40 CFR Part 763, subpart F, Appendix A. "Interim Method for the Determination of Asbestos in Bulk Insulation Samples".

(2) Test report pertains only to the sample and sampling data submitted by the client.

(3) If no asbestos detected in Floor Tile by this method, suggest analyzing by TEM.

(4) If sample is inhomogeneous, subsamples will be taken and analyse seperately

Authorized Signature

CONCORD ANALYSIS, INC.

9960 Canoga Ave., Suite D8, Chatsworth, Ca 91311 Tel:(818)407-012

BULK SAMPLE ANALYTICAL RESULT

Cape Environmental Management, Inc.
20280 S. Vermont Ave., Suite 225
Torrance, Ca 90502

JOB SITE: *Wesbter*
RECEIVE DATE: *7-31-92* REPORT DATE : *8-06-92*

FIELD # / LAB #	LOCATION/ MATERIAL	TYPE & PERCENT OF ASBESTOS		OTHER MATERIAL IN SAMPLE FIBROUS(%) / NONFIBROUS		
W.24.05		CHRYSOTILE	*Not-Det.*	*Cellulose*		*Calcite*
		AMOSITE	*Not-Det.*			*Quartz*
L1820731		OTHER:	*Not-Det.*			*Glass*
-72		TYPE:				*Biotite*
COLOR: *Beige,Gray*		TOTAL ABS.:	*Not-Det.*	NONASB	*1.0%*	*Binder*
W.24.06		CHRYSOTILE	*Not-Det.*	*Cellulose*		*Calcite*
		AMOSITE	*Not-Det.*			*Quartz*
L1820731		OTHER:	*Not-Det.*			*Glass*
-73		TYPE:				*Binder*
COLOR: *Gray*		TOTAL ABS.:	*Not-Det.*	NONASB	*1.0%*	*Accessory*
W.24.07		CHRYSOTILE	*Not-Det.*	*Cellulose*		*Calcite*
		AMOSITE	*Not-Det.*			*Quartz*
L1820731		OTHER:	*Not-Det.*			*Glass*
-74		TYPE:				*Binder*
COLOR: *Gray*		TOTAL ABS.:	*Not-Det.*	NONASB	*1.0%*	*Accessory*
W.25.01		CHRYSOTILE	*Not-Det.*	*Cellulose*		*Calcite*
		AMOSITE	*Not-Det.*			*Quartz*
L1820731		OTHER:	*Not-Det.*			*Glass*
-75		TYPE:				*Binder*
COLOR: *Gray*		TOTAL ABS.:	*Not-Det.*	NONASB	*1.0%*	*Accessory*

Remark:

(1) Analytical method: 40 CFR Part 763, subpart F, Appendix A. "Interim Method for the Determination of Asbestos in Bulk Insulation Samples".

(2) Test report pertains only to the sample and sampling data submitted by the client.

(3) If no asbestos detected in Floor Tile by this method, suggest analyzing by TEM.

(4) If sample is inhomogeneous, subsamples will be taken and analyse seperately

Authorized Signature

CONCORD ANALYSIS, INC.

9960 Canoga Ave., Suite D8, Chatsworth, Ca 91311 Tel:(818)407-012

BULK SAMPLE ANALYTICAL RESULT

Cape Environmental Management, Inc.
20280 S. Vermont Ave., Suite 225
Torrance, Ca 90502

JOB SITE: *Wesbter*
RECEIVE DATE: *7-31-92* REPORT DATE : *8-06-92*

FIELD # / LAB #	LOCATION/ MATERIAL	TYPE & PERCENT OF ASBESTOS		OTHER MATERIAL IN SAMPLE FIBROUS(%)		/ NONFIBROUS
W.25.02		CHRYSOTILE	*Not-Det.*	*Cellulose*		*Calcite*
		AMOSITE	*Not-Det.*			*Quartz*
L1820731		OTHER:	*Not-Det.*			*Glass*
-76		TYPE:				*Binder*
COLOR: *Gray*		TOTAL ABS.:	*Not-Det.*	NONASB	*1.0%*	*Accessory*
W.25.03		CHRYSOTILE	*Not-Det.*	*Cellulose*		*Calcite*
		AMOSITE	*Not-Det.*			*Quartz*
L1820731		OTHER:	*Not-Det.*			*Glass*
-77		TYPE:				*Binder*
COLOR: *Gray*		TOTAL ABS.:	*Not-Det.*	NONASB	*1.0%*	*Accessory*
W.25.04		CHRYSOTILE	*Not-Det.*	*Cellulose*		*Calcite*
		AMOSITE	*Not-Det.*			*Quartz*
L1820731		OTHER:	*Not-Det.*			*Glass*
-78		TYPE:				*Biotite*
COLOR: *Gray*		TOTAL ABS.:	*Not-Det.*	NONASB	*1.0%*	*Binder*
W.25.05		CHRYSOTILE	*Not-Det.*	*Cellulose*		*Calcite*
		AMOSITE	*Not-Det.*			*Quartz*
L1820731		OTHER:	*Not-Det.*			*Glass*
-79		TYPE:				*Biotite*
COLOR: *Gray,Brown*		TOTAL ABS.:	*Not-Det.*	NONASB	*1.0%*	*Binder*

Remark:
(1) Analytical method: 40 CFR Part 763, subpart F, Appendix A. "Interim Method for the Determination of Asbestos in Bulk Insulation Samples".
(2) Test report pertains only to the sample and sampling data submitted by the client.
(3) If no asbestos detected in Floor Tile by this method, suggest analyzing by TEM.
(4) If sample is inhomogeneous, subsamples will be taken and analyse seperately

Authorized Signature

CONCORD ANALYSIS, INC.

9960 Canoga Ave., Suite D8, Chatsworth, Ca 91311 Tel:(818)407-012

BULK SAMPLE ANALYTICAL RESULT

Cape Environmental Management, Inc.
20280 S. Vermont Ave., Suite 225
Torrance, Ca 90502

JOB SITE: *Wesbter*
RECEIVE DATE: *7-31-92* REPORT DATE : *8-06-92*

FIELD # / LAB #	LOCATION/ MATERIAL	TYPE & PERCENT OF ASBESTOS		OTHER MATERIAL IN SAMPLE FIBROUS(%) / NONFIBROUS	
W.28.01		CHRYSOTILE	*10.0%*	*Cellulose*	*Calcite*
		AMOSITE	*Not-Det.*		*Quartz*
L1820731		OTHER:	*Not-Det.*		*Glass*
-80		TYPE:			*Binder*
COLOR: *Black,Red*		TOTAL ABS.:	*10.0%*	NONASB *2.0%*	*Accessory*
W.28.02		CHRYSOTILE	*15.0%*	*Cellulose*	*Calcite*
		AMOSITE	*Not-Det.*		*Quartz*
L1820731		OTHER:	*Not-Det.*		*Glass*
-81		TYPE:			*Binder*
COLOR: *Black,Red*		TOTAL ABS.:	*15.0%*	NONASB *1.0%*	*Accessory*
W.28.03		CHRYSOTILE	*15.0%*	*Cellulose*	*Calcite*
		AMOSITE	*Not-Det.*		*Quartz*
L1820731		OTHER:	*Not-Det.*		*Glass*
-82		TYPE:			*Binder*
COLOR: *Black,Red*		TOTAL ABS.:	*15.0%*	NONASB *2.0%*	*Accessory*
W.29.01		CHRYSOTILE	*Not-Det.*	*Cellulose*	*Calcite*
		AMOSITE	*Not-Det.*	*Mineral Wool*	*Glass*
L1820731		OTHER:	*Not-Det.*		*Binder*
-83		TYPE:			*Accessory*
COLOR: *Beige,Red*		TOTAL ABS.:	*Not-Det.*	NONASB *50.0%*	

Remark:

(1) Analytical method: 40 CFR Part 763, subpart F, Appendix A. "Interim Method for the Determination of Asbestos in Bulk Insulation Samples".

(2) Test report pertains only to the sample and sampling data submitted by the client.

(3) If no asbestos detected in Floor Tile by this method, suggest analyzing by TEM.

(4) If sample is inhomogeneous, subsamples will be taken and analyse seperately

Authorized Signature

CONCORD ANALYSIS, INC.

9960 Canoga Ave., Suite D8, Chatsworth, Ca 91311 Tel:(818)407-012

BULK SAMPLE ANALYTICAL RESULT

Cape Environmental Management, Inc.
20280 S. Vermont Ave., Suite 225
Torrance, Ca 90502

JOB SITE: *Wesbter*
RECEIVE DATE: *7-31-92* REPORT DATE : *8-06-92*

FIELD # / LAB #	LOCATION/ MATERIAL	TYPE & PERCENT OF ASBESTOS		OTHER MATERIAL IN SAMPLE FIBROUS(%) / NONFIBROUS		
W.30.01		CHRYSOTILE	*4.0%*	*Cellulose*		*Calcite*
		AMOSITE	*Not-Det.*			*Quartz*
L1820731		OTHER:	*Not-Det.*			*Glass*
-84		TYPE:				*Binder*
COLOR: *Gray,Blue*		TOTAL ABS.:	*4.0%*	NONASB	*2.0%*	*Accessory*
W.30.02		CHRYSOTILE	*7.0%*	*Cellulose*		*Calcite*
		AMOSITE	*Not-Det.*			*Quartz*
L1820731		OTHER:	*Not-Det.*			*Glass*
-85		TYPE:				*Binder*
COLOR: *Gray,Brown*		TOTAL ABS.:	*7.0%*	NONASB	*3.0%*	*Accessory*
W.30.03		CHRYSOTILE	*7.0%*	*Cellulose*		*Calcite*
		AMOSITE	*Not-Det.*			*Quartz*
L1820731		OTHER:	*Not-Det.*			*Glass*
-86		TYPE:				*Binder*
COLOR: *Gray,Blue*		TOTAL ABS.:	*7.0%*	NONASB	*2.0%*	*Accessory*

Remark:

(1) Analytical method: 40 CFR Part 763, subpart F, Appendix A. "Interim Method for the Determination of Asbestos in Bulk Insulation Samples".

(2) Test report pertains only to the sample and sampling data submitted by the client.

(3) If no asbestos detected in Floor Tile by this method, suggest analyzing by TEM.

(4) If sample is inhomogeneous, subsamples will be taken and analyse seperately

Authorized Signature

Hygeia Environmental Laboratories Inc.

82 W. Sierra Madre Blvd
Sierra Madre, California
91024-2434

818-355-4711
FAX: 818-355-4497

Atlanta
Boston
Los Angeles
New York

Bulk Sample Analysis Summary

August 28, 1992

Mr. Mark Sabatino
Cape Environmental Mgt. Inc.
20280 Vermont Ave., Ste. 225
Torrance, CA 90502

Hygeia Ref. No.: *C1122920069*
Date Received: *August 28, 1992*
Date Analyzed: *August 28, 1992*
No. Samples: *9*
Analytical Method: *EPA 600/M4-82-020*

Client Project: *41017.00*
Microscopist: *Sean McGee*

NIST / NVLAP Lab Code No. 1011-04
California Dept of Health Services
ELAP Certificate No. 1269

Client ID No. / Hygeia ID No.	Sample Description	Asbestos Detected	Analytical Results	Q.C.
W-29-02 / *84117C*	*insulation wrap*	*No*	*20% cellulose* *50% fibrous glass* *30% mineral filler*	
W-29-03 / *84118C*	*insulation wrap*	*No*	*20% cellulose* *50% fibrous glass* *30% mineral filler*	
W-29-04 / *84119C*	*insulation wrap*	*No*	*20% cellulose* *50% fibrous glass* *30% mineral filler*	
W-32-01 / *84120C*	*duct insulation tape*	*Yes*	*70% chrysotile* *30% mineral filler*	X
W-32-02 / *84121C*	*duct insulation tape*	*No*	*30% cellulose* *70% mineral filler*	
W-32-03 / *84122C*	*duct insulation tape*	*Yes*	*70% chrysotile* *10% cellulose* *20% mineral filler*	

Bulk Sample Analysis Summary

Date: *August 28, 1992*
Hygeia Ref. No.: *C1122920069*

Microscopist: *Sean McGee*

Client ID No. Hygeia ID No.	Sample Description	Asbestos Detected	Analytical Results	Q.C.
W-32-04 *84123C*	*duct insulation tape*	*Yes*	*60% chrysotile* *5% cellulose* *35% mineral filler*	
W-33-01 *84124C*	*pipe insulation*	*No*	*30% cellulose* *60% fibrous glass* *10% mineral filler*	
W-34-01 *84125C*	*pipe insulation*	*No*	*50% fibrous glass* *50% mineral filler*	

Microscopist: _____ Laboratory Supervisor: _____

QUALITY CONTROL LABORATORY

Hygeia Environmental Laboratories Inc.

82 W. Sierra Madre Blvd
Sierra Madre, California
91024-2434

818-355-4711
FAX: 818-355-4497

Atlanta
Boston
Los Angeles
New York

Bulk Sample Analysis Summary

August 10,1992

Mr. Mark Sabatino
Cape Environmental Mgt. Inc.
20280 S. Vermont Ave.
Torrance, CA 90502

Hygeia Ref. No.: *C1122920063*
Date Received: *July 31, 1992*
Date Analyzed: *August 10, 1992*
No. Samples: *9*
Analytical Method: *EPA 600/M4-82-020*

Client Project: *Webster*
Microscopist: *Cesar Sandoval*

NIST / NVLAP Lab Code No. 1011-04
California Dept of Health Services
ELAP Certificate No. 1269

Client ID No. Hygeia ID No.	Sample Description	Asbestos Detected	Analytical Results	Q.C.
QC-W-01-1 *78151C*	*floor tile*	*Yes*	*2% chrysotile* *98% mineral filler*	
QC-W-01-1 *78151C*	*mastic*	*Yes*	*2% chrysotile* *3% cellulose* *30% mineral filler* *65% organic binders*	
QC-W-02-1 *78152C*	*floor tile*	*Yes*	*5% chrysotile* *95% mineral filler*	
QC-W-02-1 *78152C*	*mastic*	*Yes*	*4% chrysotile* *36% mineral filler* *60% organic binders*	
QC-W-11-1 *78153C*	*n/a*	*No*	*10% cellulose* *5% fibrous glass* *85% mineral filler*	X
QC-W-15-1 *78154C*	*n/a*	*No*	*70% cellulose* *5% mineral filler* *25% opaques*	

Bulk Sample Analysis Summary

Date: *August 10,1992*
Hygeia Ref. No.: *C1122920063*

Microscopist: *Cesar Sandoval*

Client ID No. Hygeia ID No.	Sample Description	Asbestos Detected	Analytical Results	Q.C.
QC-W-19-1 *78155C*	*n/a*	*No*	*25% cellulose* *50% mineral filler* *25% opaques*	
QC-W-22-1 *78156C*	*n/a*	*No*	*3% cellulose* *97% mineral filler*	
QC-W-28-1 *78157C*	*n/a*	*Yes*	*10% chrysotile* *25% mineral filler* *65% organic binders*	
QC-W-29-1 *78158C*	*n/a*	*No*	*70% cellulose* *10% mineral filler* *20% organic binders*	
QC-W-30-1 *78159C*	*n/a*	*Yes*	*3% chrysotile* *97% mineral filler*	

Microscopist: _____

Laboratory Supervisor: Gustavo Delgado

Appendix C

Response Action Ratings

FIGURE 4 - RESPONSE ACTION HIERARCHY
THERMAL SYSTEM INSULATION (TSI- ACM)

Response Action Priorities

1) Isolate area and restrict access. Immediate removal is mandatory; contact an Accredited Project Designer (APD).

2) Isolate area and restrict access. Repair or Remove Immediately; contact an APD. If ACBM remains following response action, followup with O&M; restrict access to reduce disturbance potential.

3) Continue O&M. Limit access to reduce disturbance potential. Schedule repair or removal on a priority basis; contact an APD. If ACBM remains following response action, followup with O&M; limit access to reduce disturbance potential.

4) Continue O&M. Limit access to reduce disturbance potential. Schedule repair or removal when practical and cost effective; contact an APD.

5) Continue O&M. Schedule repair or removal when practical and cost effective; contact an APD.

6) Same as 5 (lower priority basis).

7) Continue O&M. Reduce disturbance potential where practical. Remove when practical and cost effective; contact an APD.

8) Continue O&M until major renovation/demolition requires removal under NESHAPs or until hazard potential changes. Remove when practical and cost effective; contact an APD.

FIGURE 1 - DECISION TREE

THERMAL SYSTEM INSULATION
ASBESTOS CONTAINING BUILDING MATERIALS
(TSI-ACMs)

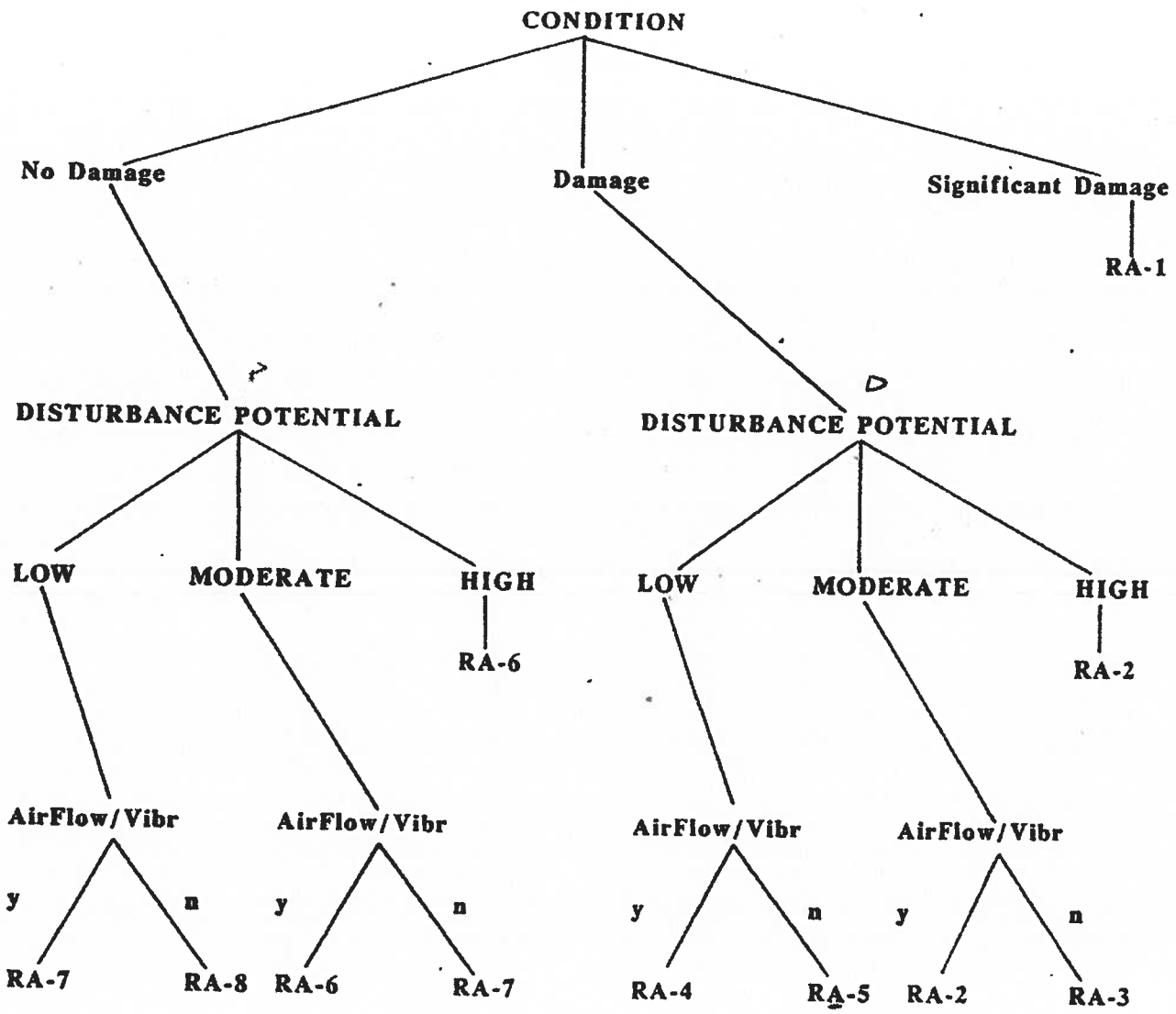

FIGURE 5 - RESPONSE ACTION HIERARCHY SURFACING MATERIALS (SURFACING - ACBMs)

Response Action Priorities

1) Isolate area and restrict access. Immediate removal is mandatory; contact an Accredited Project Designer (APD).

2) Isolate area and restrict access. Repair or Remove Immediately; contact an APD. If ACBM remains following response action, followup with O&M; restrict access to reduce disturbance potential.

3) Continue O&M. Limit access to reduce disturbance potential. Schedule repair or remove on a priority basis; contact an APD. If ACBM remains following response action, followup with O&M; limit access to reduce disturbance potential.

4) Continue O&M. Limit access to reduce disturbance potential. Schedule repair or remove when practical and cost effective; contact an APD.

5) Continue O&M. Schedule repair or remove when practical and cost effective; contact an APD.

6) Same as 5 (lower priority basis).

7) Continue O&M. Reduce disturbance potential where practical. Remove when practical and cost effective; contact an APD.

8) Continue O&M until major renovation/demolition requires removal under NESHAPs or until hazard potential changes. Remove when practical and cost effective; contact an APD.

FIGURE 2 - DECISION TREE

SURFACING MATERIAL
ASBESTOS CONTAINING BUILDING MATERIALs
(SURFACING-ACBMs)

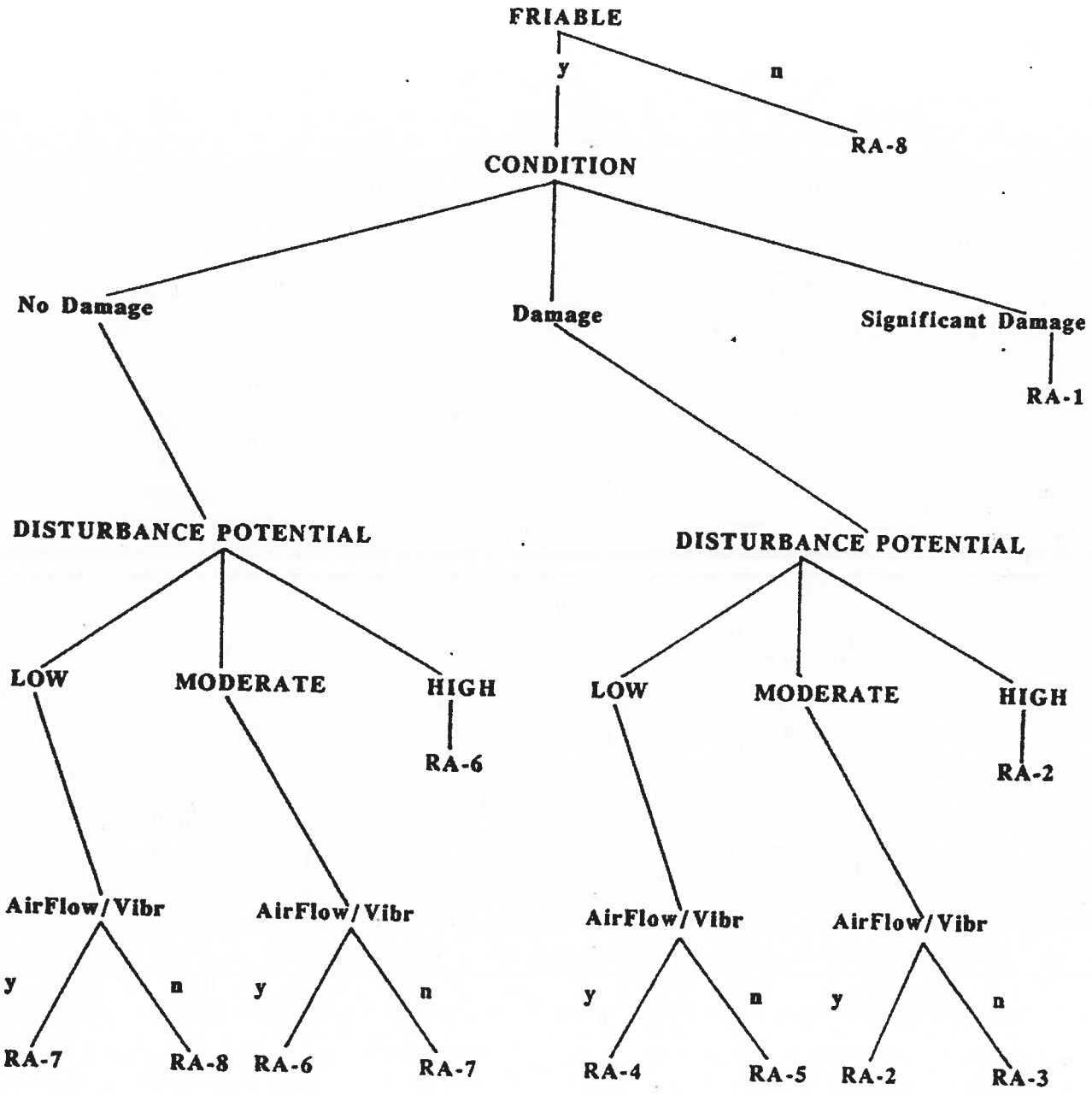

FIGURE 6 - RESPONSE ACTION HIERARCHY
MISCELLANEOUS MATERIALS (MISC.- ACBMs)

Response Action Priorities

1) Isolate area and restrict access. Immediate removal is mandatory; contact an Accredited Project Designer (APD).

2) Isolate area and restrict access. Repair, Encapsulate, or Remove Immediately; contact an APD. If ACBM remains following response action, followup with O&M; restrict access to reduce disturbance potential.

3) Continue O&M. Limit access to reduce disturbance potential. Schedule repair, encapsulate, or remove on a priority basis; contact an APD. If ACBM remains following response action, followup with O&M; limit access to reduce disturbance potential.

4) Continue O&M. Limit access to reduce disturbance potential. Schedule repair, encapsulate, or remove when practical and cost effective; contact an APD.

5) Continue O&M. Schedule repair, encapsulate, or remove when practical and cost effective; contact an APD.

6) Same as 5 (lower priority basis).

7) Continue O&M. Reduce disturbance potential where practical. Remove when practical and cost effective; contact an APD.

8) Continue O&M until major renovation/demolition requires removal under NESHAPs or until hazard potential changes. Remove when practical and cost effective; contact an APD.

FIGURE 3 - DECISION TREE

MISCELLANEOUS MATERIAL
ASBESTOS CONTAINING BUILDING MATERIALs
(MISC.-ACBMs)

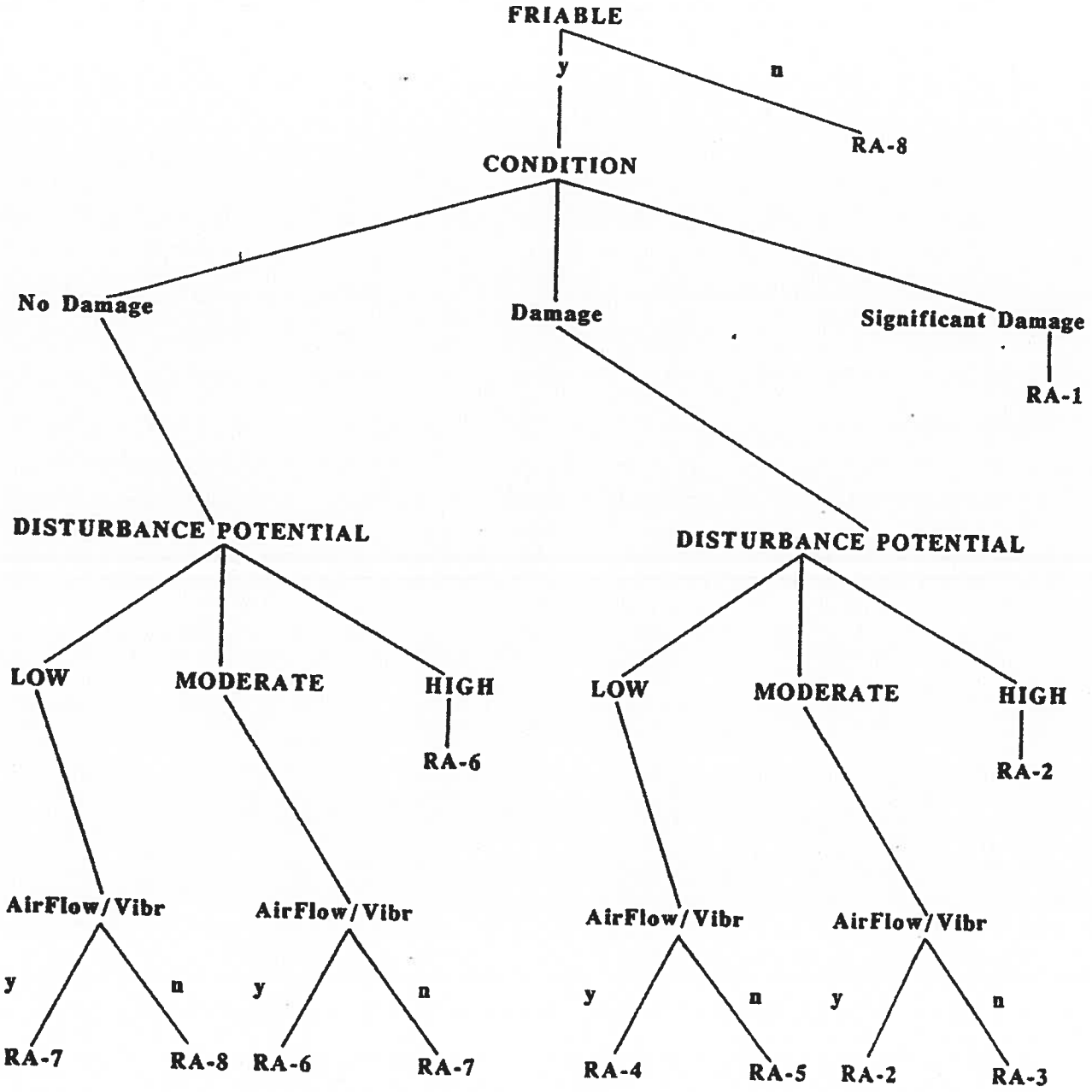

Appendix D

Field Sheets

3-Year Re-Inspection Material Inventory

3/18/2010

Client: SMMUSD
Project No: 110-006
Project Name: Webster ES

BIDG A

Material Class (1)	Material	Material Location	Current Assessment (2)	Friable (Y or N)	Approximate Quantity	Results (3) or Sample #	Recommendations/ Response Action (4)
S	Stucco	Ext. walls	ND	N	3000 sq. ft (3 samples)	Pos. <1%	8
	Plaster	Rm 17-20, Heater closets			3500 sq. ft (3 samples)	Neg.	N/A
	Joint Compound	Rms 17, 18 & 20 Dividing walls			800 sq. ft (3 samples)	Neg.	
M	Drywall				800 sq. ft	Neg.	
	Carpet Glue	Rms 17-20			2800 sq. ft	neg.	
	12" Lt. green speckled Fl. tile & glue	Rm 17, Rm 18 under carpet, Rm 20			2200 sq. ft		
	4" dk green cove base & glue	Rm 17, 19, 20			90 Ln. ft		
	4" brown cove base & glue	Rm 18			75 Ln. ft		
	4" gray cove base & glue	Rm 20			30 Ln. ft		

(1) S – surfacing, TSI – thermal system insulation, M – miscellaneous
(2) ND – not damaged, D – damaged, SD – significantly damaged
(3) POS – previously identified as positive, NEG – previously identified as negative, ASSUMED – 1 = new material, not sampled, assumed asbestos-containing; ASSUMED – 2 = not enough samples collected, material is assumed asbestos-containing
(4) For response actions 1–8 refer to "Response Action Ratings Sheet"

3-Year Re-Inspection Material Inventory

Client: SMMUSD
Project No: 110-006
Project Name: Webster ES

Material Class (1)	Material	Material Location	Current Assessment (2)	Friable (Y or N)	Approximate Quantity	Results (3) or Sample #	Recommendations/ Response Action (4)
M	2'x4' fissured Ceiling Panel	~~Rm 17-20~~ EC Rm 17-20	ND	Y	3300 sq. ft	Neg.	
	HVAC Duct Tape (gray)	Heater closets 1-4		N	80 sq. ft	Neg.	
M	Heater units, Window putty	Heater closets Exte. Windows	ND	N N	4 ea 2500 Lf.	Assumed -1 Neg	8 N/A
M	12" Beige Speckled Fl. tile & Adhesive	Rm 14	ND	N	120 sq. ft	Assumed -1	8
BIDG B							
S	Stucco	Ext. walls	ND	N	9200 sq. ft	Neg.	
~~S~~ M	Gypsum Jt. Compound	classrooms, work rms (dividing walls) toilets & storage rms in classrooms			1600 sq. ft	EC ~~Neg~~ Pos 3% (5 samples)	
M	Drywall	storage Rm			750 sq. ft	Neg.	
~~S~~ M	Jt compound					Neg.	
M	~~Window putty~~						

(1) S – surfacing, TSI – thermal system insulation, M – miscellaneous
(2) ND – not damaged, D – damaged, SD – significantly damaged
(3) POS – previously identified as positive, NEG – previously identified as negative, ASSUMED – 1 = new material, not sampled, assumed asbestos-containing; ASSUMED – 2 = not enough samples collected, material is assumed asbestos-containing
(4) For response actions 1–8 refer to "Response Action Ratings Sheet"

M Window putty - ext. windows 1300 LF Neg

coffey environments
SPECIALISTS IN ENVIRONMENTAL, SOCIAL AND SAFETY PERFORMANCE

3-Year Re-Inspection Material Inventory

Client: SMMUSD
Project No: 110-006
Project Name: Webster ES

Material Class (1)	Material	Material Location	Current Assessment (2)	Friable (Y or N)	Approximate Quantity	Results (3) or Sample #	Recommendations/ Response Action (4)
M	9" gray Fl. tile w/ Yellow streaks	Work rms 1 & 2	ND	N	80 sq. ft	Pos.	
M	Drywall	Heater Rms			600 sq. ft	Neg.	
~~S~~ M	Jt. compound					Pos	
M	12" Lt green Fl. tile & glue	Rm 11 & 12	ND	N	500 sq. ft	~~Neg~~ Assumed 1	
	4" Dk green cove base & glue				180 ln. ft		
	carpet glue				1800 sq. ft		
	2'x4' Fissured ceiling Panel			Y	2300 sq. ft		
	Heater Units gasket	Rm 11 & 12 Heater closets		N	2 ea.	Assumed - 1	
	12" Random peg hole ceiling tile	Rm 11 & 12 southside		Y	10 sq. ft	Neg.	

~~Chalkboards 11 & 12~~ ~~240 sq ft Assumed 1~~

(1) S – surfacing, TSI – thermal system insulation, M – miscellaneous
(2) ND – not damaged, D – damaged, SD – significantly damaged
(3) POS – previously identified as positive, NEG – previously identified as negative, ASSUMED – 1 = new material, not sampled, assumed asbestos-containing; ASSUMED – 2 = not enough samples collected, material is assumed asbestos-containing
(4) For response actions 1–8 refer to "Response Action Ratings Sheet"

Chalkboards 11 & 12 (dry-erase)

Non-Surface

coffey environments
SPECIALISTS IN ENVIRONMENTAL, SOCIAL AND SAFETY PERFORMANCE

3-Year Re-Inspection Material Inventory

Client: SMMUSD
Project No: 110-006
Project Name: Webster ES

BIDG C

Material Class (1)	Material	Material Location	Current Assessment (2)	Friable (Y or N)	Approximate Quantity	Results (3) or Sample #	Recommendations/ Response Action (4)
S	Stucco	Ext. walls	ND	N	3900 Sq-Ft	Neg (5 samples)	
	Rough Plaster	Boys & girls rms; custodian & electrical rm			930 sq. ft	Neg. (3 samples)	
	Jt. compound	Rms 13-16; 16A; boys & girls RRs, Electrical & custodian rm ceilings			3100 sq. ft	POS.	
		Heater closets 1-4			700 sq. ft	POS.	
M	12" gray Fl. tile w/ brown streaks & mastic	under carpet in ESL rm & classroom 13	ND	N	800 sq. ft	Pos.	
	12" random Pinhole ceiling tile glue	ESL Rm		Y	600 sq. ft	Neg	
	12" random Pinhole ceiling tile (new)	Replacement in ESL Rm			20 sq. ft		
	(new)	ESL Rm			560 sq. ft		
	HVAC Duct Tape	Heater closets	ND	N	4 ea.	Neg.	
M	Window putty	Ext. windows	ND	N	800 sq	<1%	

(1) S – surfacing, TSI – thermal system insulation, M – miscellaneous
(2) ND – not damaged, D – damaged, SD – significantly damaged
(3) POS – previously identified as positive, NEG – previously identified as negative, ASSUMED – 1 = new material, not sampled, assumed asbestos-containing; ASSUMED – 2 = not enough samples collected, material is assumed asbestos-containing
(4) For response actions 1–8 refer to "Response Action Ratings Sheet"

3-Year Re-Inspection Material Inventory

Client: SMMUSD
Project No: 110-006
Project Name: Webster ES

Material Class (1)	Material	Material Location	Current Assessment (2)	Friable (Y or N)	Approximate Quantity	Results (3) or Sample #	Recommendations/ Response Action (4)
M	Drywall	Heater Closet 1-4	ND	N	700 sq-ft	Neg.	
	12" Light Speckled green Fl. tile & glue	Rms 13-16	ND	N	800 sq. ft	~~neg.~~ Assumed	2
	4" dk green cove base & glue				240 ln. ft	~~neg.~~	
	4" gray cove base & glue	ESL rm (16A), Rm16			70 ln. ft	~~neg.~~	
	2'x4' fissured ceiling Panel	Rm 13-16		Y (EC)	3800 sq. ft	~~Neg.~~	
	Chalkboard	Rms 13-16, 16A (ESL)			9 ea	Assumed - 2	
	Heater Unit Gasket				5 ea		
BIDG D	Administration						
S	Stucco	Ext. walls	ND	N	2950 sq. ft	Neg (5 samples)	

(1) S – surfacing, TSI – thermal system insulation, M – miscellaneous
(2) ND – not damaged, D – damaged, SD – significantly damaged
(3) POS – previously identified as positive, NEG – previously identified as negative, ASSUMED – 1 = new material, not sampled, assumed asbestos-containing; ASSUMED – 2 = not enough samples collected, material is assumed asbestos-containing
(4) For response actions 1–8 refer to "Response Action Ratings Sheet"

3-Year Re-Inspection Material Inventory

Client: SMMUSD
Project No: 110-006
Project Name: Webster ES

Material Class (1)	Material	Material Location	Current Assessment (2)	Friable (Y or N)	Approximate Quantity	Results (3) or Sample #	Recommendations/ Response Action (4)
M	12" brown Fl. tile w/ peach spec	Rm 19 & 20 under carpet	ND	N	600 sq. ft	POS. <1% tile 3% mastic	
S	Rough Plaster ceiling	Heater closet & electrical rm	ND	N	700 sq. ft	neg. (3 samples)	
M	9" dark tan w/ brown Fl. tile & mastic	Electrical Rm 4	D	N	40 sq. ft	3% - tile 3% - mastic POS.	
M	4" brown cove base w/ glue	Electrical rm	ND	N	20 ln. ft	neg	
M	Drywall	All dividing walls except elec. rm & heater closets	ND	N	3800 sq. ft	neg.	
	Jt. Compound	EC	ND	N		(5 samples) neg.	
	4" gray cove base & glue	Nurses office, audio rm, work rm, Principals office, main office, hall		N	280 ln. ft	Assumed neg 1	
	HVAC Duct Tape	Heater rm		N	5 sq. ft	2	
	2'x4' fissured ceiling Panel	Nurses office, audio test rm, work rm, Principals office, main office, hall		Y	1800 sq. ft	4	
	Window putty	Exterior windows	N	N	200 Ln ft.	Pos	

(1) S – surfacing, TSI – thermal system insulation, M – miscellaneous
(2) ND – not damaged, D – damaged, SD – significantly damaged
(3) POS – previously identified as positive, NEG – previously identified as negative, ASSUMED – 1 = new material, not sampled, assumed asbestos-containing; ASSUMED – 2 = not enough samples collected, material is assumed asbestos-containing
(4) For response actions 1–8 refer to "Response Action Ratings Sheet"

3-Year Re-Inspection Material Inventory

Client: SMMUSD
Project No: 110-006
Project Name: Webster ES

Material Class (1)	Material	Material Location	Current Assessment (2)	Friable (Y or N)	Approximate Quantity	Results (3) or Sample #	Recommendations/ Response Action (4)
M	Heater Unit Gasket	Heater Rm	ND	N	1 ea.	Assumed -1	
M	12" lt. green Fl. tile & glue	Principals office, main office, nurses office, work rm / hall	ND	N	1400 sq. ft	neg.	
Building E							
S	Stucco	Ext. walls	ND	N	1950 sq. ft	neg. (5 samples)	
S	Jt. Compound	Office 2, East wall computer rm walls	ND		480 sq. ft	(4 samples) neg.	
M	Drywall					neg.	
S	Rough Plaster walls	Library			2950 sq. ft	neg (5 samples)	
S	Smooth Plaster walls	Office 1 & 2, heater closet			2400 sq. ft	neg (5 samples)	
M	12" random Peg hole wall tile glue	Heater closet		Y	100 sq. ft	~~Assumed~~ ~~2~~ NEG	

(1) S – surfacing, TSI – thermal system insulation, M – miscellaneous
(2) ND – not damaged, D – damaged, SD – significantly damaged
(3) POS – previously identified as positive, NEG – previously identified as negative, ASSUMED – 1 = new material, not sampled, assumed asbestos-containing; ASSUMED – 2 = not enough samples collected, material is assumed asbestos-containing
(4) For response actions 1–8 refer to "Response Action Ratings Sheet"

3-Year Re-Inspection Material Inventory

Client: SMMUSD
Project No: 110-006
Project Name: Webster ES

Material Class (1)	Material	Material Location	Current Assessment (2)	Friable (Y or N)	Approximate Quantity	Results (3) or Sample #	Recommendations/ Response Action (4)
M	Carpet Glue	Rm 7	ND	N	900 sq. ft	neg.	
M	Brown Fl. tile & mastic	Rm 7 under carpet				POS. 5% - tile 2% - mastic	
	12" gray speckled Fl. tile	Office 1 & 2			700 sq. ft	neg.	
	12" Lt. green Fl tile & glue	Rm 7			250 sq. ft	neg.	
	4" dk green coveboase & glue	Library, office 2, 1 & computer rm			400 ln. ft	neg.	
	HVAC Duct Tape	Heater closet			2 sq. ft	neg.	
	2'x4' Fissured ceiling Panel	Library, Rm 7		Y	3000 sq. ft	neg.	
	Heater Unit gasket	Heater Closet		N	1 ea.	Assumed -1	
	Chalkboard	Rm 7		N	2 ea.	Assumed -1	

(1) S – surfacing, TSI – thermal system insulation, M – miscellaneous
(2) ND – not damaged, D – damaged, SD – significantly damaged
(3) POS – previously identified as positive, NEG – previously identified as negative, ASSUMED – 1 = new material, not sampled, assumed asbestos-containing; ASSUMED – 2 = not enough samples collected, material is assumed asbestos-containing
(4) For response actions 1–8 refer to "Response Action Ratings Sheet"

3-Year Re-Inspection Material Inventory

Client: SMMUSD
Project No: 110-006
Project Name: Webster ES

Material Class (1)	Material	Material Location	Current Assessment (2)	Friable (Y or N)	Approximate Quantity	Results (3) or Sample #	Recommendations/ Response Action (4)
M	4" black covebase & adhesive	office 1	ND	N	100 lin. ft	Assumed - 1 EC	
M	12" blue Fl. tile & adhesive	~~Storeroom~~ EC Comp Rm, office 7	ND	N	700 sq. ft	〃	
Building F							
S	Stucco	Ext. walls	ND	N	2200 sq. ft	neg. (5 samples)	
〃	Rough Plaster walls	Classrooms, Janitors closet & mech. rm	〃	〃	2500 sq. ft	neg. (5 samples)	
〃	Smooth Plaster Ceiling	Boys & girls rm ~~[illegible]~~ EC.	〃	〃	500 sq. ft	neg. (3 samples)	
〃	Smooth Plaster wall	〃	〃	〃	450 sq. ft	neg. (3 samples)	
M	Brown Fl. tile & mastic	Rm 9 & 10 (under carpet)	〃	〃	1600 sq. ft	pos. 5% tile 5% mastic	
M	12" Straight Peg hole ceiling tile & glue	Rm 8, 9, 10	〃	Y	700 sq. ft	neg.	

Window putty — exh. ductwork — 300'L — ~~neg~~ pos

(1) S – surfacing, TSI – thermal system insulation, M – miscellaneous
(2) ND – not damaged, D – damaged, SD – significantly damaged
(3) POS – previously identified as positive, NEG – previously identified as negative, ASSUMED – 1 = new material, not sampled, assumed asbestos-containing; ASSUMED – 2 = not enough samples collected, material is assumed asbestos-containing
(4) For response actions 1–8 refer to "Response Action Ratings Sheet"

coffey environments
SPECIALISTS IN ENVIRONMENTAL, SOCIAL AND SAFETY PERFORMANCE

3-Year Re-Inspection Material Inventory

Client: SMMUSD
Project No: 110-006
Project Name: Webster ES

Material Class (1)	Material	Material Location	Current Assessment (2)	Friable (Y or N)	Approximate Quantity	Results (3) or Sample #	Recommendations/ Response Action (4)
M	Drywall	Rm 8-10	ND	N	100 sq. ft	neg.	
	12" lt. green Fl. tile & glue	Rm 8-10			240 sq. ft	neg.	
	4" gray coucbase & glue	Rm 8-10			90 sq. ft	neg.	
	HVAC Duct tape	Mech Rm.			5 sq. ft	neg.	
	carpet glue	Rm 9-10			2700 sq. ft	neg.	
	2'x4' fissured ceiling panel	Rm 8-10		Y	3400 sq. ft	neg	
Note:	Heater unit Chalkboard	Mech. rm all rooms 8-10		N	1 ea. 6 ea	Assumed - [illegible]	
Building G							
S	Stucco	Ext. walls	ND	N	4500 sq. ft	POS. <1% (7 samples)	
M	Window putty	East windows			300 Lin ft	<1%	

(1) S – surfacing, TSI – thermal system insulation, M – miscellaneous
(2) ND – not damaged, D – damaged, SD – significantly damaged
(3) POS – previously identified as positive, NEG – previously identified as negative, ASSUMED – 1 = new material, not sampled, assumed asbestos-containing; ASSUMED – 2 = not enough samples collected, material is assumed asbestos-containing
(4) For response actions 1–8 refer to "Response Action Ratings Sheet"

coffey environments
SPECIALISTS IN ENVIRONMENTAL, SOCIAL AND SAFETY PERFORMANCE

3-Year Re-Inspection Material Inventory

Client: SMMUSD
Project No: 110-006
Project Name: Webster ES

Material Class (1)	Material	Material Location	Current Assessment (2)	Friable (Y or N)	Approximate Quantity	Results (3) or Sample #	Recommendations/ Response Action (4)
M	Gray w/ black dots Fl. Sheeting	Kitchen	ND	N	1200 sq. ft	neg.	
	12" off-white Fl. tile & mastic	Auditorium			2500 sq. ft	Pos. tile = 5% Mastic = neg.	
	9" tan Fl. tile & mastic	Kitchen	N/A	N	300 sq. ft	Not observed	
	9" dk tan Fl. tile & mastic	Janitors rm	D	N	80 sq. ft	Pos.	
S	Rough Plaster ceiling	Auditorium, Kitchen, Storage, teachers work rm, Mech. rm.	ND	N	1900 sq. ft	neg. (5 Samples)	
S	Rough Plaster walls	Storage rm, Mech. Rm			1900 sq. ft	neg (5 Samples)	
M	12" brown Speckled Fl. tile & glue	Auditorium East Side			300 sq. ft	Assumed - 1	
M	4" blue cove base & glue	Auditorium			50 Ln. ft		
S	Smooth Plaster ceiling	Teachers dining rm & RR's			1500 sq. ft	(3 Samples) neg	
M	Chalkboard	all classrooms			240 sq.	Assumed 7	

(1) S – surfacing, TSI – thermal system insulation, M – miscellaneous
(2) ND – not damaged, D – damaged, SD – significantly damaged
(3) POS – previously identified as positive, NEG – previously identified as negative, ASSUMED – 1 = new material, not sampled, assumed asbestos-containing; ASSUMED – 2 = not enough samples collected, material is assumed asbestos-containing
(4) For response actions 1–8 refer to "Response Action Ratings Sheet"

3-Year Re-Inspection Material Inventory

Client: SMMUSD
Project No: 110-006
Project Name: Webster ES

Material Class (1)	Material	Material Location	Current Assessment (2)	Friable (Y or N)	Approximate Quantity	Results (3) or Sample #	Recommendations/ Response Action (4)
S	Smooth Plaster walls	Teachers dining rm, Kitchen, teachers work rm, Auditorium & RRS, Kiln rm, Stage area	ND	N	8500 sq. ft ~~neg.~~ EC (~~7 samples~~)	neg.	
M	Drywall	Storage area	ND	N	60 sq. ft ~~neg~~ EC	neg.	
M	4" light gray coveboase & glue	~~Stage~~ Dining rm EC			90 ln. ft ~~neg~~ EC	neg.	
M	12" Pinkish w/ dark spots Fl. tile	Dining rm			700 sq. ft	neg.	
M	Hot brick	Kiln rm	ND	N	30 sq. ft	neg.	
M	4" brown cove-base & glue	Stage	ND	N	170 ln. ft	neg.	
M	Heater unit Gasket	Mech. rm	ND	N	1 each	Assumed -2	
M	12" Straight Peg hole ceiling tile & mastic	Kitchen, S/G Storage, teachers work area, Kiln rm	ND	N	3000 sq. ft	neg.	
M	12" fissured ceiling tile	Auditorium	ND	~~N~~ Y EC	1900 sq. ft	neg.	

(1) S – surfacing, TSI – thermal system insulation, M – miscellaneous
(2) ND – not damaged, D – damaged, SD – significantly damaged
(3) POS – previously identified as positive, NEG – previously identified as negative, ASSUMED – 1 = new material, not sampled, assumed asbestos-containing; ASSUMED – 2 = not enough samples collected, material is assumed asbestos-containing
(4) For response actions 1–8 refer to "Response Action Ratings Sheet"

3-Year Re-Inspection Material Inventory

Client: SMMUSD
Project No: 110-006
Project Name: Webster ES

Material Class (1)	Material	Material Location	Current Assessment (2)	Friable (Y or N)	Approximate Quantity	Results (3) or Sample #	Recommendations/ Response Action (4)
M	Mastic associated w/ 12" fissured ceiling tile	Auditorium	ND	~~Y~~ N (EC)	1900 sq. ft	neg.	
M	HVAC exhaust vent pipe joint tape	Boiler rm	ND	N	20 sq. ft	neg.	
M	12" black speckled fl. tile & glue	Kiln rm	ND	N	200 sq. ft	Assumed -1	
M	4" black cove base & glue		ND	N	30 ln. ft		
	BLDG H						
S	Ext. wall stucco	Ext. walls	ND	N	4000 sq. f (5 samples)	neg.	
S	Rough plaster wall	Janitors, Elect. rms	ND	N	800 sq. f (3 samples)	neg.	
M	12" straight peghole tile & mastic	Rms 1-4 above ceiling panels	ND	Y	800 sq. ft	neg	
M	Drywall	Heater closets & south side soffit rms 1-4	ND	N	950 sq. ft	neg	
	Window putty	Ext. windows			2800 ln. ft	pos	

(1) S – surfacing, TSI – thermal system insulation, M – miscellaneous
(2) ND – not damaged, D – damaged, SD – significantly damaged
(3) POS – previously identified as positive, NEG – previously identified as negative, ASSUMED – 1 = new material, not sampled, assumed asbestos-containing; ASSUMED – 2 = not enough samples collected, material is assumed asbestos-containing
(4) For response actions 1–8 refer to "Response Action Ratings Sheet"

3-Year Re-Inspection Material Inventory

Client: SMMUSD
Project No: 110-006
Project Name: Webster ES

Material Class (1)	Material	Material Location	Current Assessment (2)	Friable (Y or N)	Approximate Quantity	Results (3) or Sample #	Recommendations/ Response Action (4)
S	Jt. compound	Heater closets, soffits 1-4	ND	N	950 sq. ft	neg. (3 samples)	
M	Gypsum ceiling Board	Above ceiling Panels in rms 1-4			3500 sq. ft	neg.	
S	Smooth Plaster	Classrooms 1-4, boys & girls rm's			7600 sq. ft	neg. (7 samples)	
M	Brown Fl. tile & mastic	Rm 1-4 under carpet			2800 sq. ft	pos. tile = 7% mastic = 2%	
	12" Lt. green Fl tile & glue	Rm 1-4			1000 sq. ft	Assumed neg. 1	
	4" dk green cove base & glue				280 ln. ft		
	4" gray cove base & glue				120 ln. ft		
	HVAC Duct Tape				4 ea.		
	Carpet Glue				900 sq. ft		
	Heater chief	Heater rooms	ND	N	4 each		
	Single undercoat	Rms 1-4	ND	N	4 each		

(1) S – surfacing, TSI – thermal system insulation, M – miscellaneous
(2) ND – not damaged, D – damaged, SD – significantly damaged
(3) POS – previously identified as positive, NEG – previously identified as negative, ASSUMED – 1 = new material, not sampled, assumed asbestos-containing; ASSUMED – 2 = not enough samples collected, material is assumed asbestos-containing
(4) For response actions 1–8 refer to "Response Action Ratings Sheet"

Note: chalkboards are dry-erase, same surface

coffey environments
SPECIALISTS IN ENVIRONMENTAL, SOCIAL AND SAFETY PERFORMANCE

3-Year Re-Inspection Material Inventory

Client: SMMUSD
Project No: 110-006
Project Name: Webster ES

Portables 21, 22, 23

Material Class (1)	Material	Material Location	Current Assessment (2)	Friable (Y or N)	Approximate Quantity	Results (3) or Sample #	Recommendations/ Response Action (4)
M	Drywall	Portables 21-23	ND	N	3600 sq. ft	neg.	
	2'x4' fissured ceiling panel	Portable 21		Y	900 sq. ft		
	4" dk blue cove-base & glue	Portable 21-23		N	240 ln. ft		
	Carpet glue				3400 sq. ft		
	12" Lt. blue speckled floor tile	Portable 22			30 sq. f		
Walkways							
S	walkway stucco ceiling	All walkways	ND	N	4800 sq. ft	neg.	

(1) S – surfacing, TSI – thermal system insulation, M – miscellaneous
(2) ND – not damaged, D – damaged, SD – significantly damaged
(3) POS – previously identified as positive, NEG – previously identified as negative, ASSUMED – 1 = new material, not sampled, assumed asbestos-containing; ASSUMED – 2 = not enough samples collected, material is assumed asbestos-containing
(4) For response actions 1–8 refer to "Response Action Ratings Sheet"

Appendix E

Assessments

ASSESSMENT SHEET

Functional Space Number ____
Homogenous Area Letter ____

Sample Number N/A
School Number ____
Building Number C

Functional Space Description Classrooms
School Name Webster ES
Building Name C

1. Friable Material: ____ 3x4' fissured ceiling panel

2. Non-friable Material: ____

3. Damage Rating:
- (A) No Damage: X
- (B) Moderate Damage
  - (1) <= 10% Distributed ____
  - (2) <= 25% Localized ____
- (C) Significant Damage:
  - (1) >10% Distributed ____
  - (2) >25% Localized ____

4. Type of Damage
- (1) Deterioration ____
- (2) Water Damage ____
- (3) Air Erosion ____
- (4) Vandalism ____
- (5) Other ____

5. Description of Damage:
- (1) Blisters
- (2) Buckling
- (3) Crumbling
- (4) Crushed Insulation
- (5) Debris on Floor
- (6) Delamination
- (7) Dislodged/Missing Pieces
- (8) Gouges
- (9) Punctures
- (10) Ripped/Missing Jackets
- (11) Scrape Marks
- (12) Stains/Discoloration
- (13) Torn/Dislodged
- (14) Water Damage

6. Disturbance Potential:

(A) Potential For Contact:
- (1) Very Likely ____
- (2) Accidental Contact Possible ____
- (3) Small Disturbance Likely X
- (4) Large Disturbance Likely ____ (>3 sq. or linear ft.)

(B) Possible Contact Factors:
- (1) Near Systems Requiring Repair/Maint. ____
- (2) High Traffic Area X
- (3) Within Reach of Students and Teachers ____
- (4) Other ____

(C) Occupancy:
- (1) Maint. Workers X
- (2) Students/Teachers X
- (3) Public X
- (4) Area Not Normally Entered ____

(D) Influence of Vibration:
- (0) None X
- (1) Low ____
- (2) Moderate ____
- (3) High ____

(E) Source of Vibration:
- (1) Athletic Events ____
- (2) Mechanical Equipment ____
- (3) Sound Waves ____
- (4) Other X

- (1) 1/Day Approx. Hours ____
- (2) 1/Wk. Approx. Hours ____
- (3) 1/Mo. Approx. Hours ____

(F) Potential For Air Erosion:
- (0) None X
- (1) Low ____
- (2) Moderate ____
- (3) High ____

(G) Source of Air Erosion:
- (1) Air Plenum ____
- (2) Air Shaft ____
- (3) Elevator Shaft ____
- (4) Other ____

(H) Preventative Measures:
- (1) Restrict Access ____
- (2) Other ____

7. Removal of ACM Mandatory (Repair Not Possible: ____
(Do not check above without giving reason below.)

Reason For Recommending Removal: ____

(A) Remodeling/Renovation Planned ____ (B) Demolition Planned ____

Comments: ____

Elmer Castro (Print Name) | [signature] (Signature) | EC 3/15/10 (Date)

ASSESSMENT SHEET

Functional Space Number _____
Homogenous Area Letter _____

Sample Number N/A
School Number _____
Building Number B

Functional Space Description Classes
School Name Webster ES
Building Name B

1. Friable Material: Y = 2'x4' fissured ceiling Panel

2. Non-friable Material: _____

3. Damage Rating:
(A) No Damage: X
(B) Moderate Damage
(1) <= 10% Distributed ___
(2) <= 25% Localized ___
(C) Significant Damage:
(1) >10% Distributed ___
(2) >25% Localized ___

4. Type of Damage
(1) Deterioration ___
(2) Water Damage ___
(3) Air Erosion ___
(4) Vandalism ___
(5) Other No Damage

5. Description of Damage:
(1) Blisters
(2) Buckling
(3) Crumbling
(4) Crushed Insulation
(5) Debris on Floor
(6) Delamination
(7) Dislodged/Missing Pieces
(8) Gouges
(9) Punctures
(10) Ripped/Missing Jackets
(11) Scrape Marks
(12) Stains/Discoloration
(13) Torn/Dislodged
(14) Water Damage

6. Disturbance Potential:

(A) Potential For Contact:
(1) Very Likely ___
(2) Accidental Contact Possible ___
(3) Small Disturbance Likely X
(4) Large Disturbance Likely ___
(>3 sq. or linear ft.)

(B) Possible Contact Factors:
(1) Near Systems Requiring Repair/Maint. ___
(2) High Traffic Area X
(3) Within Reach of Students and Teachers ___
(4) Other _____

(C) Occupancy:
(1) Maint. Workers X
(2) Students/Teachers X
(3) Public X
(4) Area Not Normally Entered ___

(1) 1/Day Approx. Hours ___
(2) 1/Wk. Approx. Hours ___
(3) 1/Mo. Approx. Hours ___

(D) Influence of Vibration:
(0) None X
(1) Low ___
(2) Moderate ___
(3) High ___

(E) Source of Vibration:
(1) Athletic Events ___
(2) Mechanical Equipment ___
(3) Sound Waves ___
(4) Other X

(F) Potential For Air Erosion:
(0) None X
(1) Low ___
(2) Moderate ___
(3) High ___

(G) Source of Air Erosion:
(1) Air Plenum ___
(2) Air Shaft ___
(3) Elevator Shaft ___
(4) Other _____

(H) Preventative Measures:
(1) Restrict Access ___
(2) Other _____

7. Removal of ACM Mandatory (Repair Not Possible: ___
(Do not check above without giving reason below.)
Reason For Recommending Removal: _____

(A) Remodeling/Renovation Planned ___ (B) Demolition Planned ___

Comments: _____

Elmer Castro (Print Name) _____ (Signature) 3/15/10 (Date) EC

ASSESSMENT SHEET

Functional Space Number _____
Homogenous Area Letter _____

Sample Number _____
School Number 5
Building Number D

Functional Space Description Admin. Offices
School Name Webster ES
Building Name D

1. Friable Material: _____ 2'x4' fissured ceiling panel

2. Non-friable Material: _____

3. Damage Rating:
- (A) No Damage: X
- (B) Moderate Damage
  - (1) <= 10% Distributed ___
  - (2) <= 25% Localized ___
- (C) Significant Damage:
  - (1) >10% Distributed ___
  - (2) >25% Localized ___

4. Type of Damage
- (1) Deterioration ___
- (2) Water Damage ___
- (3) Air Erosion ___
- (4) Vandalism ___
- (5) Other _____

5. Description of Damage:
- (1) Blisters
- (2) Buckling
- (3) Crumbling
- (4) Crushed Insulation
- (5) Debris on Floor
- (6) Delamination
- (7) Dislodged/Missing Pieces
- (8) Gouges
- (9) Punctures
- (10) Ripped/Missing Jackets
- (11) Scrape Marks
- (12) Stains/Discoloration
- (13) Torn/Dislodged
- (14) Water Damage

6. Disturbance Potential:

(A) Potential For Contact:
- (1) Very Likely ___
- (2) Accidental Contact Possible ___
- (3) Small Disturbance Likely ✓
- (4) Large Disturbance Likely ___
  (>3 sq. or linear ft.)

(B) Possible Contact Factors:
- (1) Near Systems Requiring Repair/Maint. ___
- (2) High Traffic Area X
- (3) Within Reach of Students and Teachers •
- (4) Other _____

(C) Occupancy:
- (1) Maint. Workers X
- (2) Students/Teachers X
- (3) Public X
- (4) Area Not Normally Entered ___

- (1) 1/Day Approx. Hours ___
- (2) 1/Wk. Approx. Hours ___
- (3) 1/Mo. Approx. Hours ___

(D) Influence of Vibration:
- (0) None X
- (1) Low ___
- (2) Moderate ___
- (3) High ___

(E) Source of Vibration:
- (1) Athletic Events ___
- (2) Mechanical Equipment ___
- (3) Sound Waves ___
- (4) Other X

(F) Potential For Air Erosion:
- (0) None X
- (1) Low ___
- (2) Moderate ___
- (3) High ___

(G) Source of Air Erosion:
- (1) Air Plenum ___
- (2) Air Shaft ___
- (3) Elevator Shaft ___
- (4) Other _____

(H) Preventative Measures:
- (1) Restrict Access ___
- (2) Other _____

7. Removal of ACM Mandatory (Repair Not Possible: ___
(Do not check above without giving reason below.)

Reason For Recommending Removal: _____

(A) Remodeling/Renovation Planned ___ (B) Demolition Planned ___

Comments: _____

Elmer Castro (Print Name) _____ (Signature) 3/15/10 (Date)

ASSESSMENT SHEET

Functional Space Number _____
Homogenous Area Letter _____

Sample Number N/A
School Number _____
Building Number E

Functional Space Description Library
School Name Webster ES
Building Name E

1. Friable Material: 2'x4' ceiling panel

2. Non-friable Material: _____

3. Damage Rating:
- (A) No Damage: X
- (B) Moderate Damage
  - (1) <= 10% Distributed ___
  - (2) <= 25% Localized ___
- (C) Significant Damage:
  - (1) >10% Distributed ___
  - (2) >25% Localized ___

4. Type of Damage
- (1) Deterioration ___
- (2) Water Damage ___
- (3) Air Erosion ___
- (4) Vandalism ___
- (5) Other _____

5. Description of Damage:
- (1) Blisters
- (2) Buckling
- (3) Crumbling
- (4) Crushed Insulation
- (5) Debris on Floor
- (6) Delamination
- (7) Dislodged/Missing Pieces
- (8) Gouges
- (9) Punctures
- (10) Ripped/Missing Jackets
- (11) Scrape Marks
- (12) Stains/Discoloration
- (13) Torn/Dislodged
- (14) Water Damage

6. Disturbance Potential:

(A) Potential For Contact:
- (1) Very Likely ___
- (2) Accidental Contact Possible ___
- (3) Small Disturbance Likely X
- (4) Large Disturbance Likely ___ (>3 sq. or linear ft.)

(B) Possible Contact Factors:
- (1) Near Systems Requiring Repair/Maint. ___
- (2) High Traffic Area X
- (3) Within Reach of Students and Teachers ___
- (4) Other _____

(C) Occupancy:
- (1) Maint. Workers X
- (2) Students/Teachers X
- (3) Public X
- (4) Area Not Normally Entered ___

(D) Influence of Vibration:
- (0) None X
- (1) Low ___
- (2) Moderate ___
- (3) High ___

(E) Source of Vibration:
- (1) Athletic Events ___
- (2) Mechanical Equipment ___
- (3) Sound Waves ___
- (4) Other X

- (1) 1/Day Approx. Hours ___
- (2) 1/Wk. Approx. Hours ___
- (3) 1/Mo. Approx. Hours ___

(F) Potential For Air Erosion:
- (0) None ___
- (1) Low ___
- (2) Moderate ___
- (3) High ___

(G) Source of Air Erosion:
- (1) Air Plenum ___
- (2) Air Shaft ___
- (3) Elevator Shaft ___
- (4) Other _____

(H) Preventative Measures:
- (1) Restrict Access ___
- (2) Other _____

7. Removal of ACM Mandatory (Repair Not Possible: ___
(Do not check above without giving reason below.)

Reason For Recommending Removal: _____

(A) Remodeling/Renovation Planned ___ (B) Demolition Planned ___

Comments: _____

Elmer Castro (Print Name) | [signature] (Signature) | 3/15/10 (Date)

ASSESSMENT SHEET

Functional Space Number _____
Homogenous Area Letter _____

Sample Number N/A
School Number _____
Building Number F

Functional Space Description classes
School Name Webster ES
Building Name F

1. Friable Material: _____ 2'x4' fissured ceiling panel

2. Non-friable Material: _____

3. Damage Rating:
- (A) No Damage: ✓
- (B) Moderate Damage
  - (1) <= 10% Distributed ___
  - (2) <= 25% Localized ___
- (C) Significant Damage:
  - (1) >10% Distributed ___
  - (2) >25% Localized ___

4. Type of Damage
- (1) Deterioration ___
- (2) Water Damage ___
- (3) Air Erosion ___
- (4) Vandalism ___
- (5) Other _____

5. Description of Damage:

(1) Blisters	(4) Crushed Insulation	(7) Dislodged/Missing Pieces	(11) Scrape Marks
(2) Buckling	(5) Debris on Floor	(8) Gouges	(12) Stains/Discoloration
(3) Crumbling	(6) Delamination	(9) Punctures	(13) Torn/Dislodged
		(10) Ripped/Missing Jackets	(14) Water Damage

6. Disturbance Potential:

(A) Potential For Contact:
- (1) Very Likely ___
- (2) Accidental Contact Possible ___
- (3) Small Disturbance Likely ✓
- (4) Large Disturbance Likely ___
  (>3 sq. or linear ft.)

(B) Possible Contact Factors:
- (1) Near Systems Requiring Repair/Maint. ___
- (2) High Traffic Area ✓
- (3) Within Reach of Students and Teachers ___
- (4) Other _____

(C) Occupancy:
- (1) Maint. Workers ✓
- (2) Students/Teachers ✓
- (3) Public ✓
- (4) Area Not Normally Entered ___

- (1) 1/Day Approx. Hours ___
- (2) 1/Wk. Approx. Hours ___
- (3) 1/Mo. Approx. Hours ___

(D) Influence of Vibration:
- (0) None ✓
- (1) Low ___
- (2) Moderate ___
- (3) High ___

(E) Source of Vibration:
- (1) Athletic Events ___
- (2) Mechanical Equipment ___
- (3) Sound Waves ___
- (4) Other ✓

(F) Potential For Air Erosion:
- (0) None ✓
- (1) Low ___
- (2) Moderate ___
- (3) High ___

(G) Source of Air Erosion:
- (1) Air Plenum ___
- (2) Air Shaft ___
- (3) Elevator Shaft ___
- (4) Other _____

(H) Preventative Measures:
- (1) Restrict Access ___
- (2) Other _____

7. Removal of ACM Mandatory (Repair Not Possible: _____
(Do not check above without giving reason below.)

Reason For Recommending Removal: _____

(A) Remodeling/Renovation Planned _____ (B) Demolition Planned _____

Comments: _____

Elmer Castro (Print Name) | [signature] (Signature) | 3/15/10 (Date)

Appendix F

Site Map

WEBSTER ELEMENTARY SCHOOL CAMPUS
3602 WINTER CANYON ROAD, MALIBU, CA 90265

VICTOR SANCHEZ
~~1007~~ 1070008 2-28-07

AS BESTOS sampling Loc.

7931
7933
7934
7935
7932

Staff Parking

23 Ms. Rash 3rd Grade
22 Ms. Papale 3rd Grade
21 Ms. Kooy 3rd/4th Grade

KINDERGARTEN PLAYGROUND

LAWN

Boiler Room
11 Ms. Hernandez Kindergarten
12 Ms. Rubin Kindergarten

Butterfly Garden
17 Ms. Stevens 5th Grade
18 Science Lab Ms. Abraham
19 Ms. Cook 4th/5th Grade
20 Ms. Maccani 3rd Grade

BOYS GIRLS
13 Ms. Stewart 3rd Grade
14 Ms. Nix 2nd Grade
15 Mr. Brownstein 2nd Grade
16 Mr. Chernow 4th Grade
16a Ms. R. Held Resource

Ms. Niemi School Nurse
Teacher's Wk. Room
Ms. Meline Administration
Mr. Cott Principal

Library/PTA Office
Computer Lab
Ms. Monte Library
7 Ms. Harris 2nd Grade

BOYS GIRLS
8 Ms. Hines Art Studio
9 Ms. Ross Ms. Murdoch 1st Grade
10 Ms. Berman K/1st Grade

COMMUNITY GARDEN

Kiln
Textbook Stockroom
Boiler Room
MEN WOMEN
Ms. Carlson Sp & Lang
AUDITORIUM CAFETERIA
PATIO

BOYS GIRLS
1 Ms. Cronrod Kindergarten
2 Ms. Zatlin 1st Grade
3 Ms. McClure 5th Grade
4 Ms. Morris 2st Grade

LAWN

POET'S PARK

Teacher's Lunchroom
Kitchen

UPPER PLAYGROUND

24 Child Care

LOWER PLAYGROUND

Appendix G

Coffey Environments Employee Certifications

State of California
Division of Occupational Safety and Health

Certified Site Surveillance Technician

Name: Elmer I Castro

Certification No. 08-4406

Expires on 08/18/10

This certification was issued by the Division of Occupational Safety and Health as authorized by Sections 7160 et seq. of the Business and Professions Code.

State of California
Division of Occupational Safety and Health
Certified Asbestos Consultant

Cesar Ruvalcaba
Name

Certification No. **95-1799**

Expires on **10/27/10**

This certification was issued by the Division of Occupational Safety and Health as authorized by Sections 7180 et seq. of the Business and Professions Code.